GENERALIZED NET MODEL OF PHYSICS-CHEMICAL WASTEWATER TREATMENT

Vania Georgieva[1], Olympia Roeva[2], Tania Pencheva[2]

[1]"Prof. D-r. Assen Zlatarov" University, 1 Prof. Yakimov Str., Burgas, Bulgaria

[2]Institute of Biophysics and Biomedical Engineering, Bulgarian Academy of Sciences, Acad. G. Bonchev Str., bl. 105, 1113 Sofia, Bulgaria

Abstract

In this article a Generalized Net (GN) model of a physics-chemical step – a main stage in wastewater treatment plant, is developed. Presented model describes the significant processes in the physics-chemical purification of the wastewater treatment, following the typical technological scheme. GN model allows monitoring of some of the main parameters of the treatment process; their on-line control for wastewater treatment optimization and further possible decrease of the process expenses.

Key words: *Wastewater treatment, Physics-chemical purification, Generalized Net*

1. INTRODUCTION

Wastewater treatment is one of the issues united in the generalized term "ecologisation" of industrial activities. Many aspects have been included in the meaning of this term, though in the last years the leading connotation is on the complexity of solving problems. The complexity of the wastewater treatment should be in the focus of the evolving science having in mind that the crisis related to the availability of clean water deepens globally.

In the process of accession of Republic of Bulgaria to the European Union, the application of directive 91/271/EEC also poses the question of the purification of wastewater from populated areas as well as of the industrial wastewater. The water should be purified up to a degree that would allow the water to be discharged in water intake bodies in a manner consistent with the permission of water usage or the individual emission norms of the complex industrial enterprises.

All these facts put an emphasis on the running of wastewater plants as a whole, but also turn the focus to the technology, equipment, and last but not least – to the effective control on the processes execution at the separated stages of the treatment process (Descoins et al., 2012, Gardner et al., 2012, Wei, 2013). One possible way for modeling and optimal control of wastewater treatment is the application of the apparatuses of Generalized Nets (GN) (Atanassov, 1991; 1997; 2007). There are already a few known applications of GN for modeling of wastewater treatment processes, i.e. modeling of the processes in the system "bioreservoir – sedimentor", as well as for the process dynamics modeling in such system (Georgiev et al., 2003); for a description of wastewater treatment processes in a methane fermentation (Nikolova et al., 2003) and in fixed-bed bioreactors (Pencheva et al., 2003), etc. The analysis of the mentioned above applications provoked the idea the apparatus of GN to be used not only for the modeling of the biological processes, but also of processes carried out in the physics-chemical step of a wastewater treatment plant. These processes present a good technological alternative to the biological treatment of wastewater due to their significantly lower expenditures per polluted unit. That leads to a fact that they appear to be the final step in reaching individual emission restrictions of pollutants in discharged wastewater in the sizeable majority of wastewater plants.

2. TECHNOLOGICAL SCHEME OF THE PHYSICS-CHEMICAL TREATMENT

The physics-chemical treatment is utilized for the obtaining of ore concentrates (in floatation plants), for the treatment of domestic and the most part of industrial wastewater. High concentration of fine dispersed mechanical and colloid pollutants is a characteristic of industrial wastewater. Along with their removal in the process of co-precipitation/coagulation, a meaningful diminishment of organic pollution (chemical oxygen demand (COD), biological oxygen demand (BOD), oils, petrol products) is achieved (Tzoupanos and Zouboulis, 2008). The physics-chemical treatment might be used either as a step prior to biological treatment of wastewater or as a final step in a wastewater treatment plant. This is also a step in wastewater plants, and it could be fully automated up to a point of absence of permanent operative personnel and remote regime control.

The technological scheme of the process of physics-chemical step of wastewater treatment is described in Fig. 1.

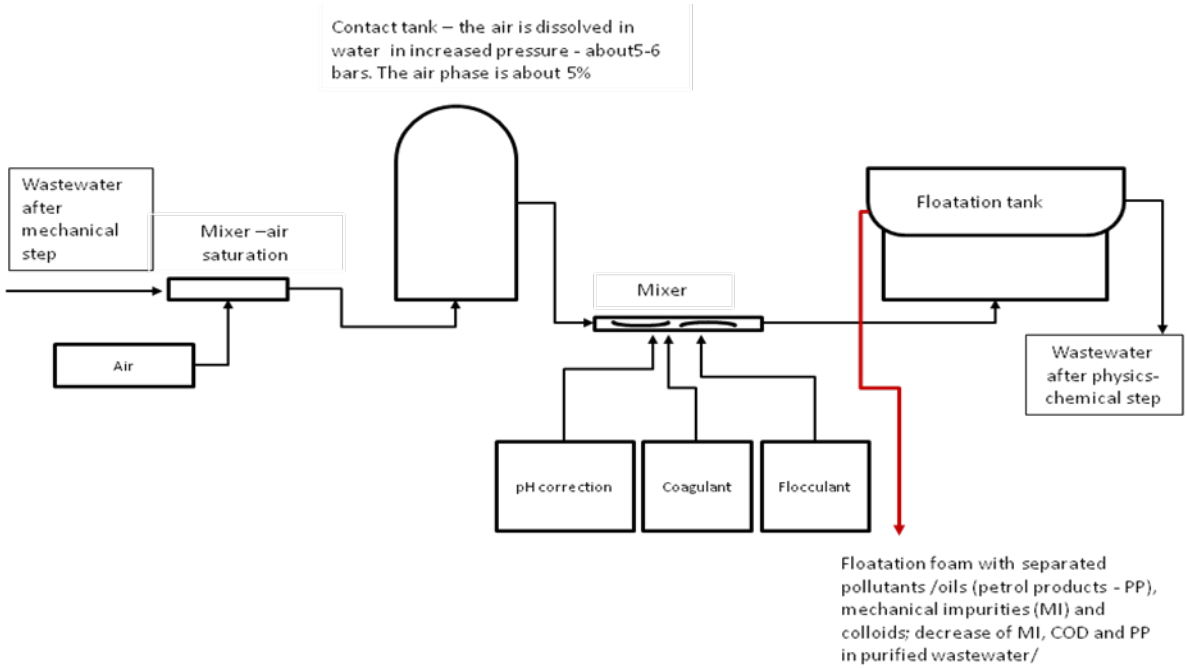

Fig. 1 Technological scheme of physics-chemical wastewater treatment

The removal of fine dispersed (colloid) pollutants is carried out through a destabilization of the colloid system by introduction of solution (coagulant) with the opposite charge. The process continues with a dosage of net-bounding polyelectrolyte (flocculant), through which the resultant aggregates are built up and merged. The introduction of dissolved air (about 5%) in the wastewater system is followed by a transition of the liquid in the floatation tank and a process of pressure reduction. This allows the air bubbles to form the fringes of existent merged aggregates and transform into floccules, which along with the process of precipitation (floatation), permits their output from the system as floatation foam. The optimal execution of these processes is within a narrow range of pH, thus leading to the necessity of pH control in the system.

The main parameters that should be observed in the input and the output of the physics-chemical step are: pH, mechanical pollutants, COD, other specific pollutants (i.e. oils, petrol products, heavy metals), etc.

3. GENERALIZED NET MODEL

The developed GN model that describes the technological scheme of physics-chemical wastewater treatment is presented in Fig. 2.

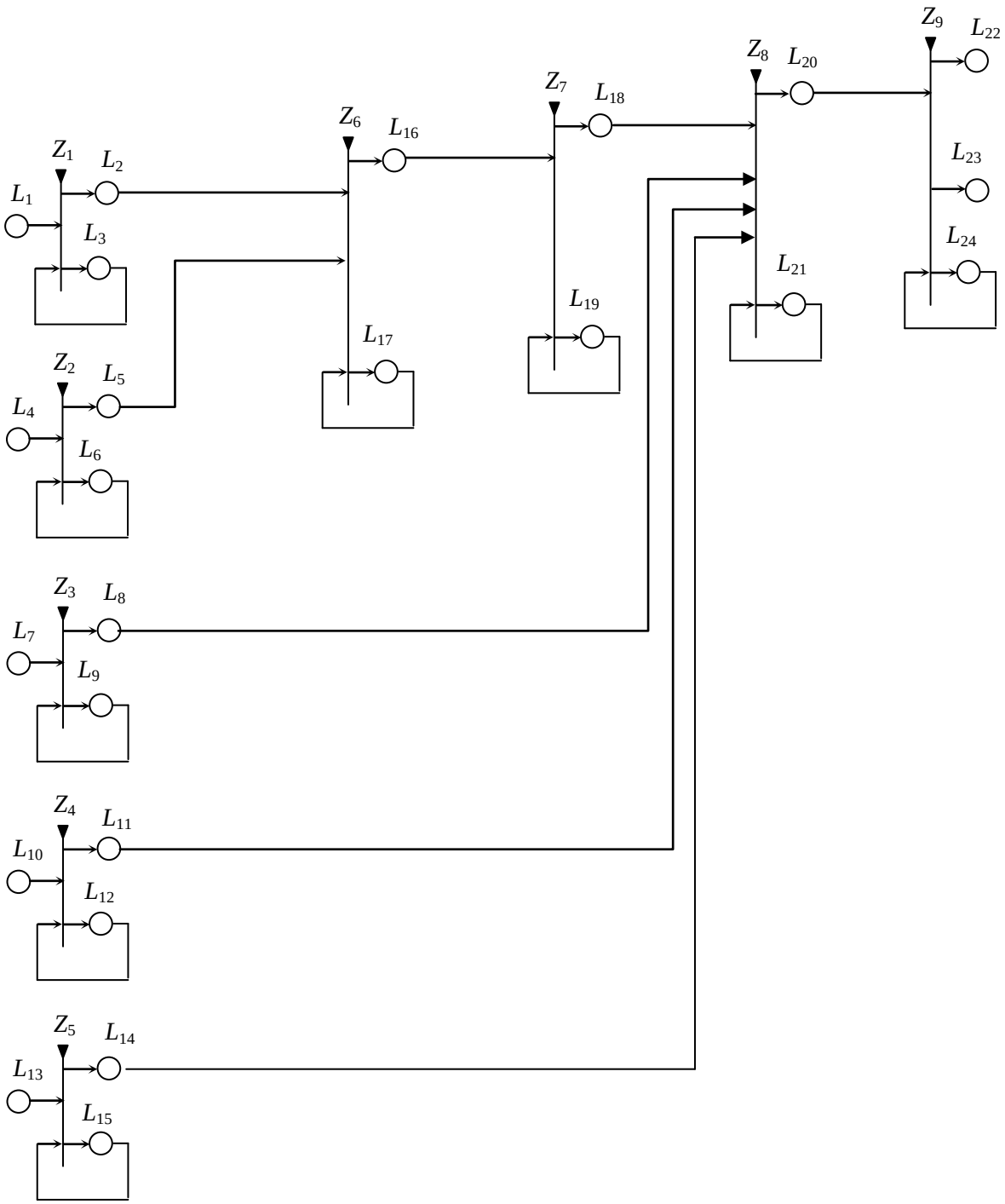

Fig. 2 GN model of physics-chemical treatment of wastewater

The developed GN model consists of 9 transitions and 24 places.

$A = \{Z_1, Z_2, Z_3, Z_4, Z_5, Z_6, Z_7, Z_8, Z_9\}$

The transitions represent the following processes:

- Activities with mechanically treated wastewater (industrial or domestic) – transition Z_1;
- Functions of the compressor of air – transition Z_2;
- Correction of pH – transition Z_3;
- Link for coagulant addition – transition Z_4;
- Link for flocculant addition – transition Z_5;
- Functions of the mixer for saturation of wastewater with air – transition Z_6;
- Process of dissolving the compressed air in the contact tank – transition Z_7;
- Process of coagulation/flocculation – transition Z_8;
- Functions of the floatation tank – transition Z_9.

Initially, β, χ, δ, ε, ϕ, γ, θ, φ and μ tokens are in places L_3, L_6, L_9, L_{12}, L_{15}, L_{17}, L_{19}, L_{21} and L_{24}. They would remain in these places all the while the GN functions; in the meantime they can generate new tokens. The original tokens have the following initial and present characteristics:

- β-token in place L_3 – "Current quantity of mechanically treated wastewater (industrial or domestic)";
- χ-token in place L_6 – "Compressor of air";
- δ-token in place L_9 – "pH-regulator";
- ε-token in place L_{12} –"Link for addition of coagulant";
- ϕ-token in place L_{15} – "Link for addition of flocculant";
- γ-token in place L_{17} – "Mixer – air saturation";
- θ-token in place L_{19} – "Contact tank with increased pressure";
- φ-token in place L_{21} – "Mixer – coagulation and flocculation treatment";
- μ-token in place L_{24} – "Floatation tank".

L_1, L_4, L_7, L_{10} and L_{13} are input places for the GN. Through them enter β_0, χ_0, δ_0, ε_0 and ϕ_0-tokens with corresponding characteristics:

- "Mechanically treated wastewater (industrial or domestic)" in place L_1;
- "Air" in place L_4;
- "pH criteria" in place L_7;
- "Coagulant" in place L_{10};
- "Flocculant" in place L_{13}.

The β_0, χ_0, δ_0, ε_0 and ϕ_0-tokens merge with the original tokens in the corresponding places L_3, L_6, L_9, L_{12} and L_{15}.

In the initial transition, a check for the availability of wastewater after the mechanical step is carried out. Should it be found present, the water enters for enrichment with air (transition Z_6). The air is

necessary for the formation of air bubbles on the fringes of merged aggregates of pollutants and their transformation on floccules.

The form of the first transition of the GN model is:

$Z_1 = \langle\{L_1, L_3\}, \{L_2, L_3\}, r_1, \vee(L_1, L_3)\rangle,$

$$r_1 = \begin{array}{c|cc} & L_2 & L_3 \\ \hline L_1 & false & true \\ L_3 & W_{3,2} & true \end{array},$$

where $W_{3,2}$ = “There is wastewater for physics-chemical treatment”.

β_0-token entering in place L_3 (through place L_1) does not obtain a new characteristic. β_1-token entering in places L_2 obtains the following characteristic: “Wastewater for physics-chemical treatment”.

Transition Z_2 describes the functions of the air compressor. The form of the second transition of the GN model is:

$Z_2 = \langle\{L_4, L_6\}, \{L_5, L_6\}, r_2, \vee(L_4, L_6)\rangle,$

$$r_2 = \begin{array}{c|cc} & L_5 & L_6 \\ \hline L_4 & false & true \\ L_6 & W_{6,5} & true \end{array},$$

where $W_{6,5}$ = “Air for mixer is necessary”.

The χ_0-token entering in place L_6 (through place L_4) does not obtain a new characteristic. The χ_1-token entering in place L_5 obtains the following characteristic: “Air for mixer – air saturation”.

The optimal execution of the coagulation/flocculation processes takes place in narrow range of pH. That leads to the necessity pH control in the system, which is described in transition Z_3. The form of the third transition of the GN model is:

$Z_3 = \langle\{L_7, L_9\}, \{L_8, L_9\}, r_3, \vee(L_7, L_9)\rangle,$

$$r_3 = \begin{array}{c|cc} & L_8 & L_9 \\ \hline L_7 & false & true \\ L_9 & W_{9,8} & true \end{array},$$

where $W_{9,8}$ = “pH correction is necessary”.

δ_0-token entering in place L_9 (through place L_7) does not obtain a new characteristic. δ_1-token entering in place L_8 obtains the following characteristic: “pH correction”.

Transition Z_4 describes the functions of the link for coagulant addition. The addition of a coagulant solution aims to destabilize the colloid pollutants, which are with charge opposite to that of the solution. The form of the fourth transition of the GN model is:

$Z_4 = \langle\{L_{10}, L_{12}\}, \{L_{11}, L_{12}\}, r_4, \vee(L_{10}, L_{12})\rangle,$

$$r_4 = \begin{array}{c|cc} & L_{11} & L_{12} \\ \hline L_{10} & false & true \\ L_{12} & W_{12,11} & true \end{array},$$

where $W_{12,11}$ = “Addition of coagulant is necessary”.

ε_0-token entering in place L_{12} (through place L_{10}) does not obtain a new characteristic. ε_1-token entering in place L_{11} obtains the following corresponding characteristic: “Addition of coagulant”.

Transition Z_5 describes the functions of the link for flocculant addition. Through the flocculant the aggregates are built up and merge. The form of the fifth transition of the GN model is:

$Z_5 = \langle\{L_{13}, L_{15}\}, \{L_{14}, L_{15}\}, r_5, \vee(L_{13}, L_{15})\rangle,$

$$r_5 = \begin{array}{c|cc} & L_{14} & L_{15} \\ \hline L_{13} & false & true \\ L_{15} & W_{15,14} & true \end{array},$$

where $W_{15,14}$ = "Addition of flocculant is necessary".

ϕ_0-token entering in place L_{15} (through place L_{13}) does not obtain a new characteristic. ϕ_1-token entering in place L_{14} obtains the characteristic "Addition of flocculant".

Transition Z_6 describes the functions of the mixer, where the initial mixing of wastewater and air takes place. Afterwards, the treated water enters the contact tank, where its saturation with air (transition Z_7) undergoes with higher pressure. The form of the sixth transition of the GN model is:

$Z_6 = \langle\{L_2, L_5, L_{17}\}, \{L_{16}, L_{17}\}, r_6, \vee(\wedge(L_2, L_{17}), L_5)\rangle,$

$$r_6 = \begin{array}{c|cc} & L_{16} & L_{17} \\ \hline L_2 & false & true \\ L_5 & false & true \\ L_{17} & W_{17,16} & true \end{array},$$

where $W_{17,16}$ = "There is wastewater for the contact tank".

β_1- and χ_1-tokens entering in places L_{17} (through places L_2 and L_5) do not obtain new characteristics. They merge with the original γ-token in place L_{17}. γ_1-token entering in place L_{16} obtains the following characteristic: "Wastewater with air for the contact tank".

In transition Z_7 the saturation of water with air takes place under higher pressure, and, after a check for the degree of saturation, water enters in the coagulation/flocculation process (transition Z_8). The form of the seventh transition of the GN model is:

$Z_7 = \langle\{L_{16}, L_{19}\}, \{L_{18}, L_{19}\}, r_7, \vee(L_{16}, L_{19})\rangle,$

$$r_7 = \begin{array}{c|cc} & L_{18} & L_{19} \\ \hline L_{16} & false & true \\ L_{19} & W_{19,18} & true \end{array},$$

where $W_{19,18}$ = "There is wastewater with dissolved air from the contact tank for the process of coagulation/flocculation".

γ_1-token entering in place L_{19} (through place L_{16}) does not obtain a new characteristic. It merges with the original θ-token in place L_{19}. θ_1-token entering in place L_{18} obtains the following characteristic: "Wastewater with dissolved air from the contact tank for the process of coagulation/flocculation".

Transition Z_8 describes the coagulation/flocculation process, which is executed with the addition of coagulant/flocculant, and pH control. After the execution of the process, the wastewater is introduced into the floatation tank (transition Z_9). The form of the eighth transition of the GN model is:

$Z_8 = \langle\{L_8, L_{11}, L_{14}, L_{18}, L_{21}\}, \{L_{20}, L_{21}\}, r_8, \vee(\wedge(L_8, L_{11}, L_{14}), L_{18}, L_{21})\rangle,$

$$r_8 = \begin{array}{c|cc} & L_{20} & L_{21} \\ \hline L_8 & false & true \\ L_{11} & false & true \\ L_{14} & false & true \\ L_{18} & false & true \\ L_{21} & W_{21,20} & true \end{array},$$

where $W_{21,20}$ = "There is wastewater after coagulation/flocculation for the floatation tank".

δ_1-, ε_1-, ϕ_1- and θ_1-tokens entering in places L_{21} (through places L_8, L_{11}, L_{14} and L_{18}) do not obtain new characteristics. They merge with the original φ-token in place L_{21}. φ_1-token entering in place L_{20} obtains the characteristic "Wastewater after coagulation/flocculation for the floatation tank".

Transition Z_9 describes the processes of formation of floccules and their further output from the floatation tank in the form of floatation foam. The purified water is ready for the further treatment in the biological step of the wastewater plant. The form of the ninth transition of the GN model is:

$Z_9 = \langle\{L_{20}, L_{24}\}, \{L_{22}, L_{23}, L_{24}\}, r_9, \vee(L_{22}, L_{23}, L_{24})\rangle$,

$$r_9 = \begin{array}{c|ccc} & L_{22} & L_{23} & L_{24} \\ \hline L_{20} & false & false & true \\ L_{24} & W_{24,22} & W_{24,23} & true \end{array},$$

where
$W_{24,22}$ = "There is wastewater after physics-chemical treatment for biological purification"; $W_{24,23}$ = "There is flotation foam with separated pollutants".

φ_1-token entering in place L_{24} (through place L_{20}) does not obtain a new characteristic. It merges with the original μ-token in place L_{24}. μ_1-token entering in place L_{22} obtains a characteristic "Wastewater after physics-chemical treatment for biological purification". μ_2-token entering in place L_{23} obtains a characteristic "Flotation foam with separated pollutants".

4. CONCLUSION

In this article a generalized net model, which describes the physics-chemical step in a wastewater plant, is developed. Presented GN model described all processes of the physics-chemical treatment which is a crucial step in the process of full purification of wastewater. Developed GN model allows the main parameters of the physics-chemical step to be observed, namely: pH, mechanical pollutants, COD, other specific pollutants (i.e. oils, petrol products, and heavy metals), etc. Using the possibility GN models to be used for on-line control, the physics-chemical step might be fully automated up to a point of absence of permanent operative personnel and remote regime control. GN model provides the opportunity for technological solutions for treatment processes optimization to be searched. All advantages of the developed GN model facilitate the optimal operation of the physics-chemical step of wastewater treatment and thus leading to process automation and diminishing of technological and financial expenses.

REFERENCES

Atanassov, K., Generalized Nets and Systems Theory, "Prof. M. Drinov" Academic Publishing House, Sofia, 1997.

Atanassov, K., Generalized Nets, World Scientific, Singapore, 1991.

Atanassov, K., On Generalized Nets Theory, "Prof. M. Drinov" Academic Publishing House, Sofia, 2007.

Descoins N., S. Deleris, R. Lestienne, E. Trouvé, F. Maréchal, Energy Efficiency in Waste Water Treatments Plants: Optimization of Activated Sludge Process Coupled with Anaerobic Digestion, Energy, 2012, 41(1), 153-164.

Gardner M., S. Comber, M. D. Scrimshaw, E. Cartmell, J. Lester, B. Ellor, The Significance of Hazardous Chemicals in Wastewater Treatment Works Effluents, Sci Total Environ, 2012, 437, 363-372.

Georgiev, P., O. Roeva, T. Pencheva, E. Szmidt, Generalized Net Model of Wastewater Treatment Process in System "Biological Reservoir – Sedimentor", Issues in Intuitionistic Fuzzy Sets and Generalized Nets, 2006, 3, 11-16.

Nikolova, M., O. Roeva, T. Pencheva, Generalized Net Model of Methanization Process, Issues in Intuitionistic Fuzzy Sets and Generalized Nets, 2007, 4, 95-103.

Pencheva, T., O. Roeva, I. Bentes, J. Barroso, Generalized Nets Model for Fixed-bed Bioreactors, Proc. of 10-th ISPE International Conference on Concurrent Engineering – Advanced Design, Production and Management Systems, Madeira, Portugal, July 26-30, 2003, 1025-1028.

Tzoupanos, N., A. Zouboulis, Coagulation-flocculation Processes in Water/wastewater Treatment: The Application of New Generation of Chemical Reagents, Proc. of 6th IASME/WSEAS International Conference on Heat Transfer, Thermal Engineering and Environment (HTE 2008), Rhodes, Greece, August 20-22, 2008, 309-317.

Wei X., Modeling and Optimization of Wastewater Treatment Process with a Data-Driven Approach, PhD Thesis, 2013, University of Iowa.