ADJUSTABLE INDUCTOR USING A MEMRISTOR FOR INTEGRATED CIRCUITS

Ertuğrul Karakulak[1], Reşat Mutlu[2]

[1]Electronics Department, Vocational School of Technical Sciences,
Namık Kemal University, Tekirdag, Turkey

[2]Electronics and Telecommunication Engineering Department, Corlu Engineering Faculty,
Namık Kemal University, Tekirdag, Turkey

Abstract

The new circuit element memristor has some properties such as charge-dependent resistance which is not mimickable with other circuit elements such as resistor, inductor and capacitor. Memristor is a promising candidate for new analog circuit applications which cannot be done with the three fundamental circuit elements. Following memristor, meminductive and memcapacitive circuit elements with similar properties to memristors are also defined and it has also been shown that memristors can be used to emulate meminductors and memcapacitors which are subsets of meminductive and memcapacitive systems respectively in literature. A physical meminductor has not been found yet. If it were found, it would have an adjustable inductance depending on its charge. In this paper, it has been shown that a charge-dependent adjustable inductor can be made with the same meminductor gyrator and be used in integrated circuits.

Key words: *memristor, meminductor, gyrator, hysteresis loop, adjustable inductor, ıntegrated circuits*

1. INTRODUCTION

A memristor is claimed to be exist theoretically in 1971, memristive systems with similar properties to memristors are described in 1976, and a memristive system behaving as a memristor for some part of its operation region declared to be found in 2008 [1-3]. A review for the new circuit element memristor can be found in [4]. Some analog applications of memristor can be found in [5-9]. Meminductive and memcapacitive systems are claimed to exist and their properties are given in [10-11]. Meminductors and Memcapacitors are defined as a subset of meminductive and memcapacitive systems [11]. A well-known example of a meminductive system is an electro-mechanical relay with position and current dependent inductance. Although some systems with memcapacitive properties are reported in literature, no meminductor has been found yet [10–12]. Memcapacitors and meminductors have also zero-crossing hysteresis loops as memristors have [13]. Emulators using a memristor have been used to demonstrate how meminductors and memcapacitors would behave if they exist [14-15]. Although the meminductors and memcapacitors have not been found yet, they can be used in modeling nano-structures or mechanical systems and some modeling and simulation studies of meminductors and memcapacitors can be found in [16–20].

A meminductor has a variable inductance [10-11] and it can be useful in some applications. It is hard to make inductors in integrated circuits and some applications may require an adjustable inductances. It is well-known that a low power inductor can be replaced by a much smaller assembly containing a capacitor, operational amplifiers or transistors, and resistors. Such a circuit is called a gyrator and can be used to transform a load capacitance and resistors into an inductance and commonly used to obtain inductor behavior in integrated circuits. A meminductor can behave as a variable inductor or a variac. However, since there is no such a system behaving as a meminductor reported yet, a memristor can be used instead. An adjustable inductance can also be obtained using a gyrator with a memristor. The meminductor emulator topologies given in [14-15] can be used for that purpose easily. In [14], it is shown that a gyrator with a memristor is used to make a meminductor emulator for educational and research purposes. However, in literature to the best of our knowledge, no one claimed that a gyrator circuit with a memristor can be used as an adjustable inductor in the integrated circuits. In this study, using simulations, it is shown that it is possible to make an adjustable inductor in integrated circuits

using a gyrator circuit with a memristor and such a circuit provides adjustable inductance with an acceptable distortion at high frequencies.

The paper is arranged as follows. In the second section, meminductive systems, meminductors and some of their properties are briefly explained. In the third section, TiO_2 Linear dopant drift memristor model is given. In the fourth section, a gyrator circuit with a memristor and its dynamic model is given. In the fifth section, the simulation results of the gyrator circuit are given. The paper ends with the conclusion.

2. MEMINDUCTIVE SYSTEMS AND MEMINDUCTORS

In [10-11], A meminductive system is defined by Ventra et al as

$$\lambda(t) = L(x, i(t), t).i(t) \quad (1)$$

$$\frac{dx}{dt} = f(x, i(t), t) \quad (2)$$

Where λ (t) is the flux of meminductive system which is defined as the time-integral of the system voltage and equal to

$$\lambda(t) = \lambda(t_o) + \int_{t=to}^{t} v(\tau) d\tau \quad (3)$$

$i(t)$ is the meminductive system current, x is the nth order state variables, $L(x, i(t), t)$ is the meminductive system inductance or meminductance depending on the state variable x.

A meminductor is a subset of meminductive systems [11]. Its meminductance is only dependent on its charge. A meminductor is described as

$$\lambda(t) = L(q(t)).i(t) \quad (4)$$

$$\frac{dq}{dt} = i(t) \quad (5)$$

Where L (q) is the charge-dependent meminductance and q (t) is meminductor charge which is defined as the integral of its current *I (t)* by respect to time and equal to

$$q(t) = q(t_o) + \int_{t=to}^{t} i(\tau) d\tau \quad (6)$$

Where $q_0=q(t_0)$ is the initial charge of the meminductor at the time being equal to t_0. The meminductor symbol is given in Figure 1 [10-11]. When excited with an AC current, a meminductor has a zero-crossing flux-current hysteresis curve and it is shown in Figure 2 [10-11]. In [21], Taylor series and parametric functions are used to explain the hysteresis curve and its frequency behavior of a meminductor for small signals.



Fig. 1. Meminductor symbol

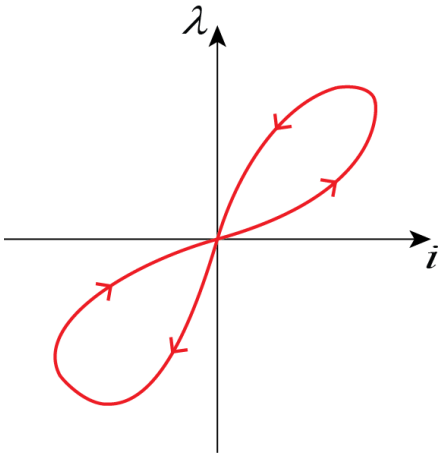

Fig. 2. Meminductor zero-crossing flux-charge hysteresis curve

Using Taylor series, a meminductance can be written as

$$\mathrm{L}(q) = L(q_o) + \sum_{k=1}^{\infty} \frac{\partial L^k(q_o)}{\partial q} \frac{(q - q_o)^k}{\mathrm{k!}} \tag{7}$$

If a small signal is applied to the meminductor and its meminductance can be assumed to be

$$\mathrm{L}(q) \cong L(q_o) + \frac{\partial L(q_o)}{\partial q} \frac{(q - q_o)^1}{1!} \tag{8}$$

If the following abbreviations are used:

$$\frac{\partial L}{\partial q} = K \tag{9}$$

And

$$L_0 = L(q_0) - Kq_0 \tag{10}$$

Eq. (10) Turns into

$$L(q) = L_0 + Kq(t) \tag{11}$$

If the meminductor current is sinusoidal and equal to

$$\mathrm{i}(t) = \mathrm{I}_m . \sin(\omega t) \tag{12}$$

Then, the memristor charge is

$$q(t) = q_O - \frac{I_m}{\omega}.\cos(\omega t) \tag{13}$$

The average charge of a meminductor in a period is q_0 and is given as

$$q_O = \frac{1}{T}\int_0^T q(t)dt \tag{14}$$

Where T is the electrical period. The meminductor flux is

$$\lambda(t) = \left(L_0 + Kq_O - \frac{KI_m}{\omega}.\cos(\omega t)\right) I_m.\sin(\omega t) \tag{15}$$

At high frequencies, the meminductor starts behaving as if a linear time-invariant inductor and the meminductor flux is approximately given as

$$\lambda(t) \cong L_0 I_m.\sin(\omega t) \tag{16}$$

3. TiO_2 LINEAR DOPANT DRIFT MEMRISTOR MODEL

Since a meminductor is not commercially available and memristive systems behaving as memristors are available, a system behaving as an adjustable inductor can be obtained using a gyrator circuit instead of a meminductor. In this study, the charge-dependent memristance model of a TiO_2 memristor model with linear dopant drift speed is given in [3] is used to demonstrate the gyrator circuit behaves as an adjustable inductor. The memristance is linear-dependent on the memristor charge in this model:

$$M(q) = \frac{v(t)}{i(t)} = \frac{d\varphi}{dq} = R_{OFF}\left(1 - \frac{\mu_V R_{ON}}{D^2} q(t)\right) \tag{17}$$

Where D is the total length of the thin film, μ is the mobility of oxygen vacancies in memristor, R_{ON} and R_{OFF} corresponds to low and high state resistances, respectively.

In a simpler form, the memristance is given as

$$M(q) = M_0 - K_q q(t) \tag{18}$$

Where $M_0=R_{OFF}$ maximum memristance, K_q charge coefficient and q(t) is the charge function of the memristor. Memristor charge, q(t) ranges from zero to q_{SAT} and is given with Eq. (6).

The minimum memristor memristance occurs at $q=q_{SAT}$ and is equal to

$$M_{sat} = M_0 - K_q q_{sat} \tag{19}$$

The memristance range is

$$M_0 \geq M(q) \geq M_{sat} \tag{20}$$

Zero-crossing hysteresis curves of a memristor, for 3 different operating frequencies are shown in Figure 3. As seen in the figure, when the frequency increases, the memristor starts behaving as a linear time-invariant resistor.

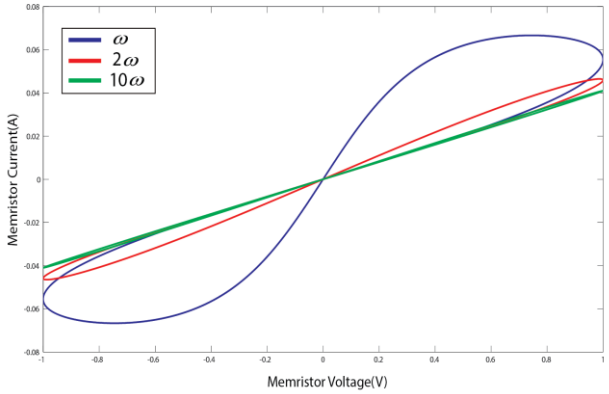

Fig. 3. Hysteresis Curve of the Memristor.

4. GYRATOR CIRCUIT AND ITS HIGH FREQUENCY RESPONSE

A commonly used gyrator circuit to obtain an inductor is shown in Fig.4. In sinusoidal steady-state, if the frequency is high enough, the input impedance of the gyratory system which is shown in Fig. 4 is given as

$$Z_{in} = \left(R_L + j\omega R_L RC\right) // \left(R + \frac{1}{j\omega C}\right) \tag{21}$$

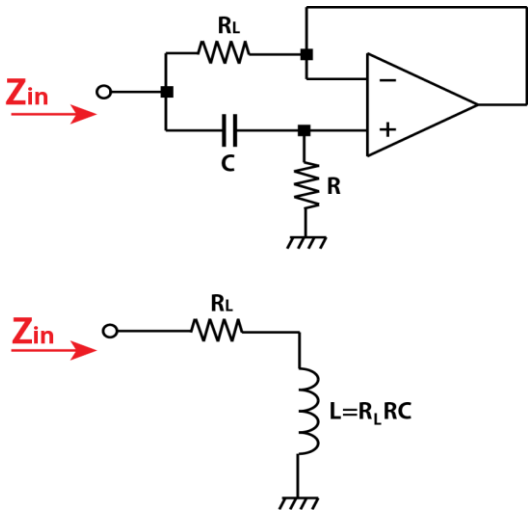

Fig. 4. Gyrator circuit behaving as an inductive element.

The input impedance of the simulated inductor at high frequencies is the desired impedance in parallel with the impedance of the RC circuit as seen in Figure 4. In typical gyrator designs, R is chosen to be sufficiently large such that the first term dominates; thus, the RC circuit's impact on input impedance is negligible. Then, the input impedance of the gyrator shown in Figure 4 is

$$Z_{in} = R_L + j\omega R_L RC \tag{22}$$

$$Z_{in} = R_L + j\omega L \tag{23}$$

Then, its input inductance is:

$$L = R_L RC \tag{24}$$

If the resistor **R** in the gyrator circuit in Figure 4 is replaced with a memristor, a gyrator circuit behaving as a meminductor can be obtained as told in [14].

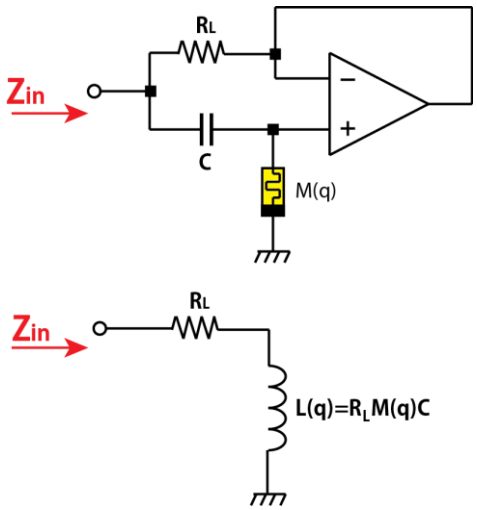

Fig. 5. Gyrator circuit behaving as an meminductive element.

The input impedance of the simulated meminductor or the gyrator shown in Figure 5 at high frequencies, i.e. The memristance change is ignorable at the operating frequency, and with the assumptions made before can be given as

$$Z_{in}(q) = R_L + j\omega M(q) R_L C \tag{25}$$

Then, its input inductance becomes

$$L(q) = R_L M(q) C \tag{26}$$

Eqs. (25) and (26) shows that the input impedance and the input inductance are dependent on the memristor charge as a meminductor has. Therefore, a variable inductor with a series resistor RL can be done with a memristor in this way. Considering the TiO_2 memristor model, its charge-dependent inductance or its meminductance is shown in Figure 6.

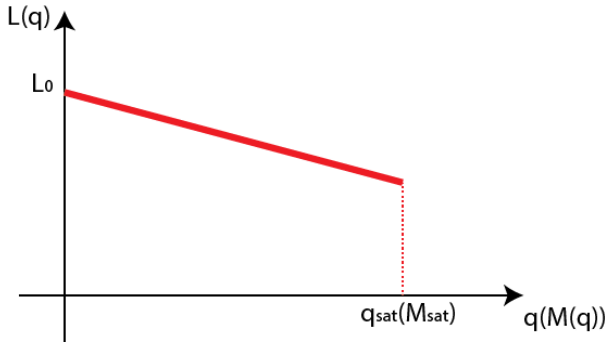

Fig. 6. Adjustable inductance of the circuit as a function of charge (or Memristance) of the memristor.

Resistance tuning or setting circuits must be used in some analog memristor applications [5,7,8]. The memristor memristance or resistance can be set with a circuit shown in Figure 7.

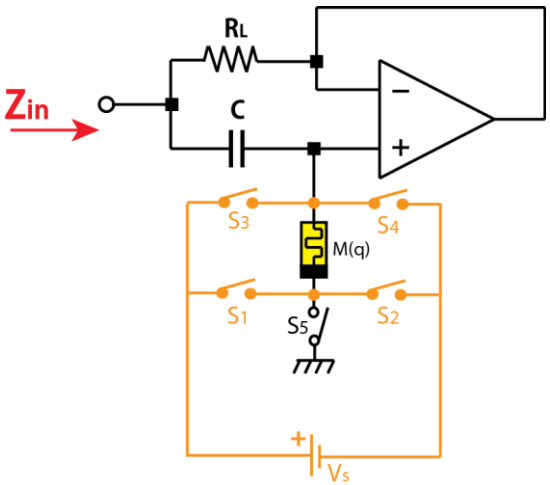

Fig. 7. Gyrator circuit with memristance value set circuit.

5. GYRATOR CIRCUIT DYNAMIC MODEL AND SIMULATION RESULTS

In [21], a meminductor current-voltage and current-flux waveforms are examined as a function of frequency and initial conditions. In the last section, it is assumed that the frequency is high enough and throughout its operation memristance does not vary much. The effect of the frequency on the gyrator circuit waveforms are examined using simulations in this section. If the memristor is not saturated, the dynamic model of the gyrator circuit is given as

$$\frac{dq_{Mem}}{dt} = i_{Mem} = i_C = \frac{v_{in} - v_C}{M(q)} \tag{27}$$

$$\frac{dv_C}{dt} = \frac{i_C}{C} = \frac{v_{in} - v_C}{M(q)C} \tag{28}$$

The input current is

$$i_{in}(t) = i_{Mem} + i_{R_L} = \frac{v_C(t)}{R_L} + \frac{v_{in}(t) - v_C(t)}{M(q)} \quad (29)$$

The input voltage is sinusoidal and using KVL;

$$v_i = V_m \sin(\omega t) = \left(M_0 - K_q q_{Mem}\right) i_{Mem} + v_C \quad (30)$$

At high frequencies as a function of the memristor memristance, the adjustable inductance is shown in Fig.6, it is a linear function of the memristance and it may take values depending on maximum and minimum memristance of the memristor. A precaution should be taken at very low frequencies or at DC operation since the memristor gets saturated with either $\boldsymbol{M_0}$ or $\boldsymbol{M_{sat}}$. This would result in the circuit having either the maximum or the minimum inductance. That's why its operation frequency is of importance. In this section, AC simulations are done to show how the gyrator impedance, current and voltage waveforms vary as a function of frequency. AC simulations of the gyrator circuit are done to show the inductive behavior as seen in voltage and current waveforms shown in Figures 8.

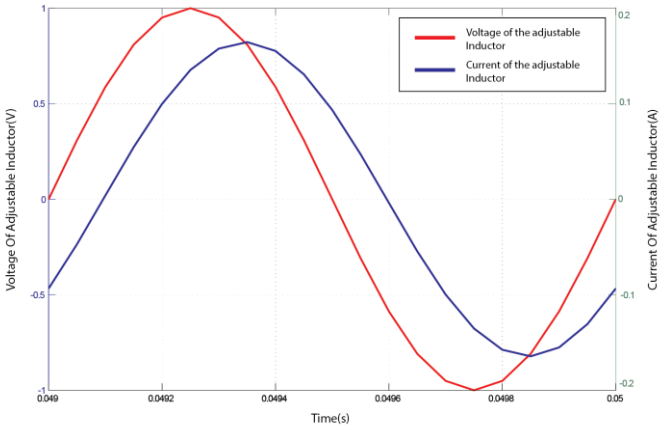

Fig. 8. Input Current of the adjustable inductor circuit for sinusoidal voltage (f=1kHz, M_0=10KΩ.)

The flux-current hysteresis curve of the gyrator cannot be zero-crossing as an ideal meminductor would have because of the equivalent series resistance $\boldsymbol{R_L}$. A meminductor current-voltage hysteresis curve is not same as an LTI inductor hysteresis curve. However, at high frequencies, the current-voltage hysteresis curve also turns into an ellipse as shown in Figure 9-10. As shown in Figure 10, its hysteresis curve gets narrower with decreasing frequency which indicates at low frequencies, the series resistor is dominant. At high frequencies, it behaves as a linear time-invariant resistor and inductor series circuit since the meminductance almost stays same.

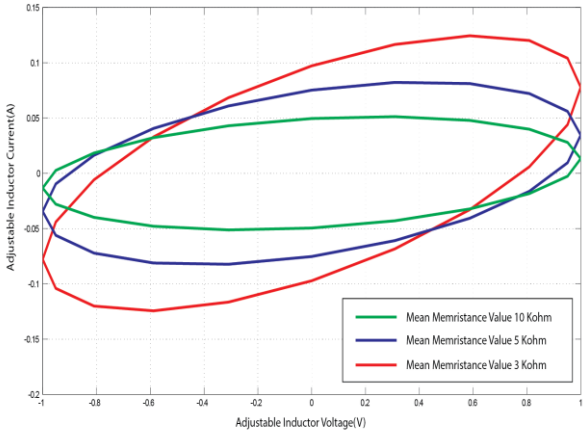

Fig. 9. Meminductor I-V characteristic for 3 different Memristance value for 10Khz.

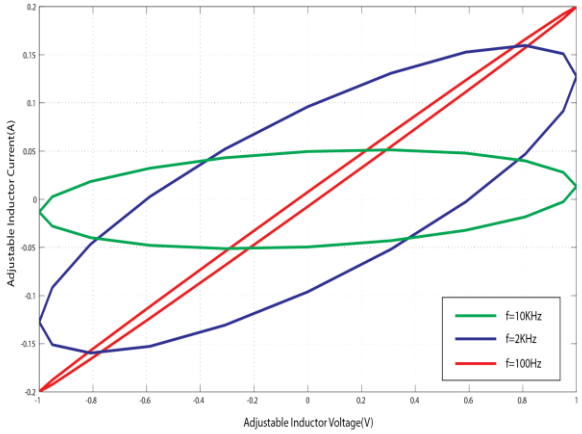

Fig. 10. Frequency Response of the adjustable inductor

6. CONCLUSION

If, one day, a meminductive system behaving as a meminductor were found, it could be used in the applications requiring an adjustable inductor. We have shown that an adjustable inductor or a variac can be made using a gyrator circuit with a memristor or the meminductor emulator given in [14] can be used for that purpose. Simulations are used to show its performance. We believe that it can be used in the integrated circuits in the future when memristor(s) become commercially available. The analysis given here may have to be updated with more sophisticated models once more information or datasheets on the memristive systems behaving as a memristors are released.

REFERENCES

[1] L. O. Chua, ”Memristor - The Missing Circuit Element,” *IEEE Trans. Circuit Theory*, vol. 18, pp. 507-519, 1971.

[2] L. O. Chua ve S. M. Kang, ”Memristive devices and systems,” *Proc.IEEE*, vol. 64, pp. 209-223, 1976.

[3] D. B. Strukov, G. S. Snider, D. R. Stewart, ve R. S. Williams, ”The missing memristor found,” *Nature (London)*, vol. 453, pp. 80-83, 2008.

[4] O. Kavehei, A. Iqbal, Y. Kim, K. Eshraghian, S. Al-Sarawi, and D. Abbott, "The fourth element: characteristics, modelling and electromagnetic theory of the memristor," *Proceedings of the Royal Society A: Mathematical, Physical and Engineering Science*, vol. 466, pp. 2175-2202, 2010.

[5] S. Shin, K. Kim, and S.-M. Kang, "Memristor applications for programmable analog ICs," *Nanotechnology, IEEE Transactions on*, vol. 10, pp. 266-274, 2011.

[6] T. Driscoll, J. Quinn, S. Klein, H.-T. Kim, B. Kim, Y. V. Pershin, *et al.*, "Memristive adaptive filters," *Applied Physics Letters*, vol. 97, pp. 093502-093502-3, 2010.

[7] Şuayb Çagri Yener, Reşat Mutlu, H. Hakan Kuntman, ”Performance Analysis of a Memristor - Based Biquad Filter Using a Dynamic Model” ,Journal of Microelectronics,Electronic Components and Materials Vol. 44, No. 2 (2014), 109 – 118.

[8] T.-W. Lee and J. H. Nickel, "Memristor resistance modulation for analog applications," *Electron Device Letters, IEEE*, vol. 33, pp. 1456-1458, 2012.

[9] Makoto Itoh and L. O. Chua, ”Memristor Oscillators”, International Journal of Bifurcation and Chaos, Vol. 18, No. 11, pp. 3183-3206, 2008.

[10] M. Di Ventra ,Yu. V. Pershin ve L. O. Chua, “Circuit Elements With Memory: Memristors, memcapacitors and meminductors,” *Proc. IEEE*, vol. 97, pp. 1717–1724, 2009.

[11] Y. V. Pershin, J. Martinez-Rincon, and M. Di Ventra, "Memory circuit elements: from systems to applications," *Journal of Computational and Theoretical Nanoscience*, vol. 8, pp. 441-448, 2011.

[12] Massimiliano Di Ventra, “Ionic Memcapacitive Effects in Nanopores” Nano letters, ACS Publications, 2010.

[13] Yuriy V. Pershin and Massimiliano Di Ventra, ”Memory effects in complex materials and nanoscale systems”, Advances in Physics, v. 60, pages 145-227, 2011.

[14] Yu. V. Pershin, M. Di Ventra, “Memristive circuits simulate memcapacitors and meminductors,” Electronicsletters, vol. 46, pp. 517– 518, 2010.

[15] Biolek, Dalibor, Viera Biolková, and Zdeněk Kolka, "Mutators simulating memcapacitors and meminductors." *Asia Pacific Conference on Circuits and Systems (APCCAS)’’,* IEEE, 2010.

[16] D.Biolek, Z. Biolek ve V. Biolkova “SPICE Modeling of Memristive, Memcapacitative and Meminductive Systems,” European Conference on Circuit Theory and Design, ECCTD 2009, page(s):249–252, 23-27 Aug. 2009.

[17] Z. Biolek, D. Biolek ve V. Biolková, "PSPICE modeling of meminductor," *Analog Integrated Circuits and Signal Processing*, pp. 129-137, 2011.

[18] Biolek, D., Biolková, V., Kolka, Z., “SPICE Modeling of Meminductor Based on its Constitutive Relation”, *I*nstrumentation, Measurement, Circuits and Systems (IMCAS '11), 2011 WSEAS International Conference on, *vol., no., pp.76-79, 8-10 March 2011.*

[19] Dalibor Biolek, Zdenek Biolek, and Viera Biolkova. "SPICE modeling of memristive, memcapacitative and meminductive systems." *European Conference on Circuit Theory and Design (ECCTD 2009),’’* IEEE, 2009.

[20] Z. Hu, Y. Li, L. Jia, ve J. Yu, "Chaos in a charge-controlled memcapacitor circuit," International Conference on Communications, Circuits and Systems (ICCCAS), Chengdu, pp. 828–831, 2010.

[21] Süleyman A. Aytekin, Reşat Mutlu, Taylor Serisi ve Parametrik Fonksiyonlar Kullanarak Yük-bağımlı Memindüktör Histeresiz Eğrisinin *Açıklanması, Tok 2013, Malatya, Turkey, 26 Eylül 2013.*