ECO-EFFICIENCY OF PLASMA-GASIFICATION METHODS FOR SOLID WASTE TREATMENT

Savina Brankova, Ekaterina Todorova

University of Forestry, Sofia, Bulgaria

Abstract

The environmentally sound management of solid waste is an especially topical issue, closely related to the protection of environment and human health. The choice of Best Available Techniques (BAT) for waste treatment lies at the base of circular economy and sustainable development. The aim of this study is to calculate the eco-efficiency of plasma-gasification methods for waste treatment, based on international standard ISO 14045:2012. Through eco-efficiency can be determined the rate of environmental friendliness of plasma-gasification methods, leading to transformation of waste into energy and raw material resources.

Keywords: *eco-efficiency, waste treatment, plasma gasification methods, solid waste*

INTRODUCTION

Eco-efficiency is being increasingly applied in waste management. The rapid rate of waste generation determines the need of finding of appropriate instruments for minimizing their generation, disposal and recovery. Different technical solutions provide a variety of options, and the choice requires specific knowledge to achieve expediency and sustainability.

Increasingly wider application in waste management finds thermal methods for their treatment, including the newest among them – plasma-gasification [1,2].

The purpose of this article is to determine the eco-efficiency of plasma-gasification methods for solid waste treatment.

Eco-efficiency assessment (EEA), based on International Standard ISO 14045:2012, is a quantitative management tool, which enables the study of environmental impacts of a product system [3].

Eco-efficiency assessment is based on many Life Cycle Assessment (IAC) principles, as prescribed by other International Standards (ISO 14040, ISO 14044). An eco-efficiency assessment comprises five phases:

a) goal and scope definition;

b) environmental assessment;

c) product system value assessment;

d) quantification of eco-efficiency;

e) interpretation (including quality assurance).

The eco-efficiency assessment can be reliable quantitative estimate if performed in its 5 phases [4].

1. WORKING METHODOLOGY

Efficiency shows the relation between goals and achieved result. The higher rate of goals is achieved, the more effective are the actions. In eco-efficiency formula, shown in Figure 1, are included two indicators - economic value and environmental impact.

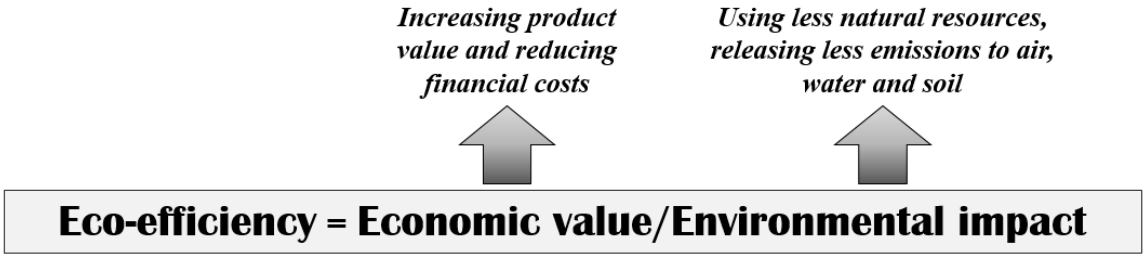

Figure 1. Formula for calculation of eco-efficiency

Economic value

Economic value = Function/Expenses [5]

When the evaluated system accomplishes its function, it can be assumed that the function is = 1 and then:

Economic value = 1/expenses, $ $^{-1.}$

There are different ways of evaluating value of product system as it may cover different value aspects:

- **Functional value** – it marks a real and measurable benefit for consumers and other stakeholders. Functional value is a numerical quantity, respecting the functional action of a product system;
- **Monetary value -** can be expressed as incomes, expenditures, cost, added value, future investments, etc.;
- **Other values** –they can be unrealistic values such as aesthetic, cultural or historical. These values are often determined by conducting marketing researches, quests, etc.

Environmental impact

High environmental, social and economic costs, resulting from current consumption of resources, require promotion and implementation of Pan-European strategy for use of resources, starting by measuring of indicators for five types of resource footprint: land [ha], materials [t], water [l], greenhouse gas emissions [eqv.CO_2] and energy [kWh/t and/or kJ/t] [6].

Working methodology of eco-efficiency assessment includes:

A) The product system to be assessed – it shall be defined by its name, measures, location and mine stakeholders, which are involved.

B) The function and functional unit – functions of the product system shall be defined clearly and specify. Functional unit provides a reference for environmental assessment with product system value assessment, therefore it shall be measurable and shall comply with the goal and scope of the eco-efficiency assessment.

C) The system boundary of the product system – they shall be described as specified in ISO 14044 and they shall be the same for the environmental and the product system value assessment.

D) All allocations to external systems – allocations to adjacent systems outside the system boundary shall be identified.

E) The environmental assessment method and types of impacts – it shall be determined which impact categories, category indicators, characterization models and weighting methods will represent the environmental aspect in the eco-efficiency assessment.

F) The value assessment method and type of product system value – value shall be measurable and related to the functional unit. Types of product systems values can be: functional, monetary or other value.

G) The choice of eco-efficiency indicators – eco-efficiency indicators, which will be used for quantification of eco-efficiency, shall be described

H) The interpretation to be used – it includes:

– an identification of the significant issues, based on eco-efficiency assessment results;

– an evaluation that considers aspects of uncertainly, sensitivity, completeness and consistency;

– the formulation of conclusions and recommendations;

– a comparison of eco-efficiency assessment results.

I) The limitations – conclusions, made to define the scope for the eco-efficiency assessment, define and limit the applicability of the results from the assessment.

J) Reporting and disclosure of results – during the process of determining the scope of eco-efficiency assessment, shall be defined format, type and way of disclosure of assessment [3].

For the purposes of this study has been made motivated choice of some elements of standardized methodology in order to serve as basis and development of the assessment of plasma-gasification methods for waste treatment.

When performing bio-economic analysis by the "Pollution, Protection, Payment" approach [7], it is assumed that coefficients of eco-technologies turn 1 when:

- Production capacity installation is close to the actual;
- During the process, treated waste is completely transformed into products;
- Efficiency of treatment plant turns to 1;
- Waste materials with air and water emissions comply with legal requirements and Best Available Techniques for permissible standards.

2. ECO-EFFICIENCY OF PLASMA-GASIFICATION METHODS

In waste management process thermal methods for waste treatment - incineration, pyrolysis, gasification and plasma technologies - are having increasingly widespread application. With the development of technologies, a combination of them, namely the plasma gasification method, is being implemented in practice. Plasma arc gasification process can be defined as "technologically advanced and environmentally friendly method for waste disposal, turning them into commercially usable products" [8]. Plasma-gasification is a high temperature thermal process, in which waste is completely decomposed into simple compounds in a partial oxidation environment (Figure 2) [8, 9, 10].

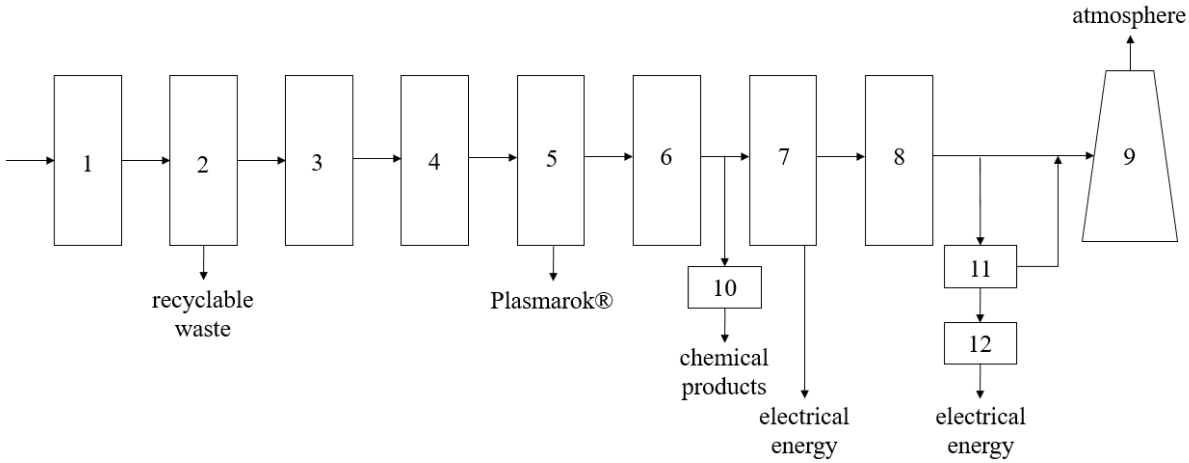

Figure 2. Principle technological scheme of a plasma-gasification installation.

Legend: 1- receptive property for waste; 2- separation of recyclable waste; 3- preliminary treatment of waste (drying, milling); 4- gasification and production of "raw syngas"; 5- plasma converter and syngas purification from solid particles and organic pollutants; 6- syngas purification from inorganic pollutants; 7- electricity production 8- dry and wet scrubbing of waste gases; 9- chimney; 10- possibilities for processing of syngas to chemical products; 11- steam production; 12- electricity production.

In order to calculate eco-efficiency of plasma-gasification methods for waste treatment, in this article are reviewed economic value and environmental impact of various plasma-gasification plants.

2.1 Economic value

The use of plasma gasification, although associated with certain energy losses, is an efficient process, as a result of which is obtained synthesis gas. Synthetic gas (synthesis gas, syngas) is a compound of gases, including carbon monoxide and hydrogen as the main components. Raw synthesis gas also contains considerable amounts of carbon dioxide and water. Syngas has 50% of energy efficiency of natural gas. It can be used as a fuel for production of electrical energy. Other application is its use as transitional product for production of other chemical products - hydrogen, ammonia and diesel (via Fischer-Tropsch reaction) [11].

In table 1 are shown investments according to the intended end-product after waste treatment, as well as the annual revenue after deducting the costs of obtaining different products - electricity, hydrogen, diesel or ammonia.

	Electricity	**Hydrogen**	**Diesel**	**Ammonia**
Capacity of installation	2 000 t/d			
Initial investment	$ 118 628 000	$ 121 579 000	$ 211 155 000	$ 298 233 000
Return	1,5 years	0,7 years	2,5 years	3,3 years
Return per year	67,5 %	162,6 %	39,6 %	30,1 %
Annual cost	$ 411 433	$ 22 603 168	$ 2 244 620	$ 2 005 503

Table 1. Values of plasma-gasification plant for waste treatment according to obtained product.

The return on investment (ROI) can be counted by various indicators and is not always so easy to calculate. The most popular is the so-called "Simple" ROI, which is calculated as expenditures are deducted from revenues and the resulting number is divided again by expenditures. Obtained result shows what percentage of return has the investment that have been made [12]. Table shows that the lowest initial investment is needed for building of installation, whose by-product is electricity, and the return of invested funds is expected to be only after 1.5 years. Whereas in the construction of plant with production of hydrogen full return of the initial funds is expected to be achieved in less than a year, although the capital investments are slightly larger. For the production of diesel and ammonia, the initial investments are significantly higher than those discussed above, as well as the period for their return is from 2.5 to 3.3 years. Based on the economic assessment of plasma-gasification technology that have been made, it can be concluded that the initial investment for construction of waste materials treatment plant depends on both total annual amount of generated waste and on intended by-product (electricity, hydrogen, diesel, ammonia), and it varies from $ 119 million to $ 298 million. In order to be cost-effective and efficient the construction of plasma-gasification plant for waste treatment, it is assumed that there is a demand for obtained products on the market and their realization leads to revenues.

2.2 Environmental impact

Each waste treatment installation must comply with Best Available Techniques requirements to ensure the protection of environmental components and human health.

Heat, generated by exploitation of plasma-gasification plants for waste treatment, is being utilized. Plants are designed, constructed and/or operated in such way that the content of harmful substances in exhaust gases does not exceed the relevant emission limit values. For this purpose various methods and techniques for the treatment of waste gases, which reduce level of harmful substances in them, are applied.

As main advantages of the installations, mentioned in Table 1, which directly affects resources consumption, can be noted:

- Produces gaseous product – “synthesis gas”, which is used for energy production, a "natural gas substituent" for the needs of households and motor vehicles, biofuels, etc.;
- produces solid product – “plasmarok” – mechanically robust, water-insoluble, inert, glazed particles of charred materials and bottom ash with various applications;
- generated waste gases with dust pollutants – significantly below the normative requirements;
- waste water – are not generated;
- negative carbon footprint;
- compact installation, low-rise construction, fully automated;
- proven in practice and full compliance with Best Available Techniques;
- reliable and fully automated technological and environmental monitoring;
- almost 100% transformation of waste into energy and raw material resources [11].

Plasma-gasification methods obtain large amount of electricity, rapid waste disposal and glazed slag, which can be used in construction. Disadvantage of the technology is the high initial investment.

All of these reasonings and facts find reflection in below mentioned environmental impact values in calculating of eco-efficiency.

2.3 Eco-efficiency

Based on mathematical logic that the higher the denominator in eco-efficiency formula is, the lower the eco-efficiency is, it is assumed that the value of environmental impact of plasma-gasification methods is 1. This decision is conditioned by the facts that, in the case of plasma-gasification methods for waste

treatment, there is practically no waste, but only products and that emissions in the air comply with legal requirements.

Table 2 shows eco-efficiency of plasma-gasification method for waste treatment, based on annual costs, calculated on the basis of the formula, given in Figure 1.

Product	**Economic value, $\$^{-1}$**	**Environmental impact**	**Eco-efficiency, $\$^{-1}$**
Electricity	$2{,}43.\ 10^{-6}$	1	$2{,}43.\ 10^{-6}$
Hydrogen	$0{,}04.\ 10^{-6}$	1	$0{,}04.\ 10^{-6}$
Diesel	$0{,}44.\ 10^{-6}$	1	$0{,}44.\ 10^{-6}$
Ammonia	$0{,}50.10^{-6}$	1	$0{,}50.\ 10^{-6}$

Table 2. Eco-efficiency of plasma-gasification thermal method for waste treatment

CONCLUSIONS

1. Obtained results show that at plasma-gasification methods for waste treatment eco-efficiency depends in significant extent on economic value of the thermal treatment process and does not depend on environmental impact. Investments include the cost of pre-treatment of waste and the cost of purification facilities.
2. The obtained relatively low values for eco efficiency of plasma-gasification methods are determined with the high investment costs for construction of plants
3. Among the examined installations, the highest eco-efficiency owns the plant for electrical energy producing, followed by the installations for producing ammonia and diesel.

ACKNOWLEDGMENTS

This research was supported by Project BG05M2OP001-2.009-0034 “Support for the Development of Scientific Capacity in the University of Forestry”, financed by Science and Education for Smart Growth Operational Programme Executive Agency.

REFERENCES

1. Westinghouse Plasma Gasification Technology, March, 2013.
2. Anyaegbunam F. N. C., Plasma Gasification for Waste Destruction and Power Generation in Nigeria. International Journal of Engineering Research & Technology, Vol.2 issue 7, July, 2013.
3. ISO 14045:2012 Environmental management - Eco-efficiency assessment of product systems - Principles, requirements and guidelines.
4. Todorova, E., V. Kyoseva and I. Dombalov, Necessary System for Evaluation of Ecological Efficiency of Investment Proposals, Journal of Balkan Ecology, Vol.19. № 1, 2016.
5. Stanchev, P., Autoreferate of dissertation work "Eco-efficiency of local water supply and sewerage systems", University of Architecture Civil Engineering and Geodesy, Bulgaria, 2016
6. Solid Waste Treatment and Utilization Methods. Ecology & Infrastructure, October, 2014. <https://www.ecology-and-infrastructure.bg/bg/broi-3/6/12/>
7. Todorova, E., and Dombalov, I., Exercise Guide of Solid Waste Treatment Technologies, Ecotech Consult Ltd, Sofia, 2005.

8. Moustakas, K., et al., Demonstration plasma gasification/vitrification system for effective hazardous waste treatment, Journal of Hazardous Materials, 2011.
9. Gomez, E., Rani, D. A., Cheeseman, C.R., Deegan, D., Wise, M. & Boccaccini, A.R., Thermal plasma technology for the treatment of wastes: A critical review, Journal of Hazardous Materials, 2002.
10. Mountouris, A., Voutsas, E., and Tassios, D., Solid Waste Plasma Gasification: Equilibrium Model Development and Exergy Analysis," Energy Conversion and Management, 2006.
11. Kyoseva, V., Todorova, E., Dombalov, I., The most frequently asked questions, related to the transformation of the municipal waste into raw and energy resource, Hay and Publishing Ltd., Sofia, 2011.
12. Calipers, Internet dictionary, <http://dictionary.calipers.bg/bg/roi/>