DEVELOPING A SIGNAL SIMILARITY ANALYSE SOFTWARE FOR ACCELEROMETER SENSOR DATA

Ismail Kirbas

Burdur Mehmet Akif Ersoy University, Burdur, 15100, Turkey

Abstract

With the latest developments in semiconductor technology, accelerometers that can be inserted into the electronic chips have been developed so that movement measurement have become easier and more common. Nowadays, many smart mobile phones are equipped with cheap but powerful accelerometer sensors. The data obtained from such sensors are used to determine the movements in x, y and z coordinates. In the scope of our study, a software has been developed to perform similarity analysis of accelerometer data. Developed software can read signal data from a text file to compare the signals and shows the signal graphics on the computer screen, the signals can be shifted and zooming operations can be performed. The developed interface also computes descriptive statistics for comparable accelerometer signals and calculates signal similarity ratios. After the manipulations, the results of the analysis can be exported to a text or an image file.

Keywords: *accelerometer, signal analyse software, MEMS, sensor data, signal similarity*

1. INTRODUCTION

Recent developments in semiconductor technology have allowed the sensors to be reduced and easily integrated into integrated circuits. Thus, cheap and common sensor integrators are used in many tools that we use in daily life. Today, even on a simple smartphone, there are sensors such as acceleration, light, temperature, and proximity. The widespread use of the sensor brings with it the problems of measuring and processing the measurement data. The analysis and interpretation of the acceleration sensor data, which is the subject of our study, becomes more important day by day. The data obtained from the sensors usually consist of numbers. Understanding a large number of numbers at a glance is a great challenge for man and is almost impossible.

In the scope of the study, an intelligent software has been developed to facilitate the visual inspection, comparison and comparability of the data obtained from the accelerometers. Thanks to the software, the accelerometer can be focused at any moment of the data and two different accelerometer data can be shifted over each other and the similarity relationship can be examined visually and statistically.

In the following part of the study, basic information about accelerometer equipment is given. At the same time, it is tried to explain how the acceleration measurement process is done physically. In the third part of the study, some calculation approaches used in similarity analysis are mentioned and statistical calculation approaches used for this purpose are mentioned.

2. MATERIALS AND METHODS

2.1. MEMS accelerometers

Accelerometers are sensors that measure the acceleration of moving objects along reference axes. Speed and displacement information can be obtained by taking advantage of the time-dependent acceleration data. Some accelerometers can also be used to determine rotational motion as they react to gravity (Garcia-Ceja and Brena, 2013).

An accelerometer is a kind of a device dependent on MEMS (Micro Electro Mechanical System) formed by a circuit having silicon seismic mass that variates its location as indicated by the orientation. Earth gravity, movement or tilting action can cause forces of acceleration. Such accelerations on the three axes (x,y,z) are measured in terms of g-force (m/s^2) (Amerini et al., 2016).

Figure 1 shows the simplified internal architecture of a MEMS-based accelerometer. MEMS based accelerometers can consist of differential capacitors. As seen in the figure, the internal structure consists of three basic components. The first component is called fixed electrode and its stands still. The second component called moving electrode, can move easily to the right and left side. The moving electrode is connected to the anchor points on all four sides. The anchor points restrict the movement of the moving electrode in the up and down direction. Moving electrode moves against the direction of movement of the device. The realization of the movement causes the capacitance between the fixed electrode and the moving electrode to increase or decrease. Thus, by measuring the capacitance between the fixed and moving electrodes, the direction of motion and the magnitude of the acceleration can be determined. This capacitance difference is sensed and augmented to gain an analog signal in terms of volt that is related to the acceleration.

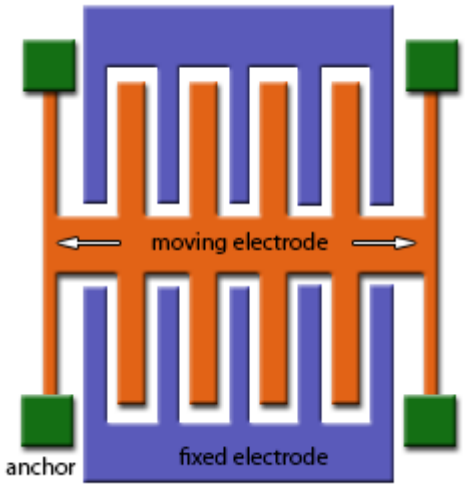

Fig. 1. Simplified internal structure of the accelerometer.

A gyroscope is a device for measuring or maintaining orientation, that uses Earth's gravity and the principle of angular momentum. Precisely, a gyroscope is a turning wheel or disk in which the axle is allowed to expect any direction. Its structure comprises of an openly turning plate called a rotor, mounted onto a turning hub in the focal point of a bigger and increasingly stable wheel. As the pivot turns, the rotor stays stationary to demonstrate the central gravitational force (Varanis et al., 2018). Figure 2 depicts the orientation of axes of sensitivity and polarity of rotation for MPU 6050 3-axis accelerometer, 3-axis gyroscope device.

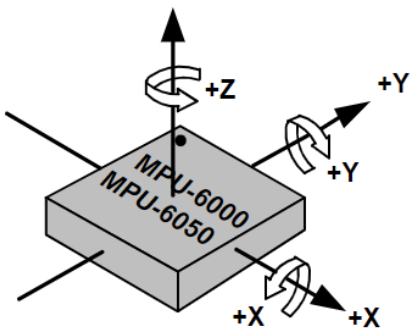

Fig. 2. Orientation of axes of sensitivity and polarity of rotation (InvenSense, 2013)

Similar to the accelerometer, gyroscope measures the rate of rotation in terms of (rad/s) and produces 3-dimensional values along the three axes of the circuit. In order to measure the angular rate MEMS-based gyroscopes use the Coriolis effect. The Coriolis force is detected by a capacitive detecting element where a variation in the vibration of the proof-mass reasons an variation in capacitance which is then transformed into a analog signal by the interior hardware (Varanis et al., 2016).

The use of accelerometer data in the field of health goes back to the 1950s (Saunders et al., 1953). Studies on human movements have been affected by the technological developments in 1970s and the number has increased (Morris, 1973). Measuring physical mobility is a very strong indicator of human health. This indicator is used effectively in the field of health, particularly in the field of cardiovascular diseases such as diabetes and obesity, disability caused by traumatic accidents and determination of the effects of aging.

With the development of MEMS technology, accelerometer sensors have been reduced and energy consumption has decreased. Factory production was first produced in 1979 (Roylance and Angell, 1979). Yang and Hsu's study on the use of accelerometers-based wearable motion sensors can be examined (Yang and Hsu, 2010).

Another common area of use for accelerometers is the measurement of mechanical vibrations (Varanis et al., 2018). In the 1990s, it was seen that accelerometers could be used for sensitive electrical measurements in metrology (Seppä et al., 2001).

2.1.1. ADXL-345 three-axis accelerometer device

The ADXL-345 sensor of Analog Devices is a MEMS three-axis accelerometer well-known and widely used in many applications such as handsets, medical instrumentation, gaming and pointing devices, industrial automation, personal navigation devices, fitness equipment, hard disk drive protection etc. It measures the static acceleration of gravity in tilt-sensing applications, as well as dynamic acceleration resulting from motion or shock. It is a small, thin, low power, 3-axis accelerometer with 13-bit resolution measurement at up to ±16 g. It has tap sensing feature to detect single and double taps and free-fall sensing feature to determine if the device is falling (Analog Devices, 2009). Functional block diagram of ADXL345 can be shown in figure 3.

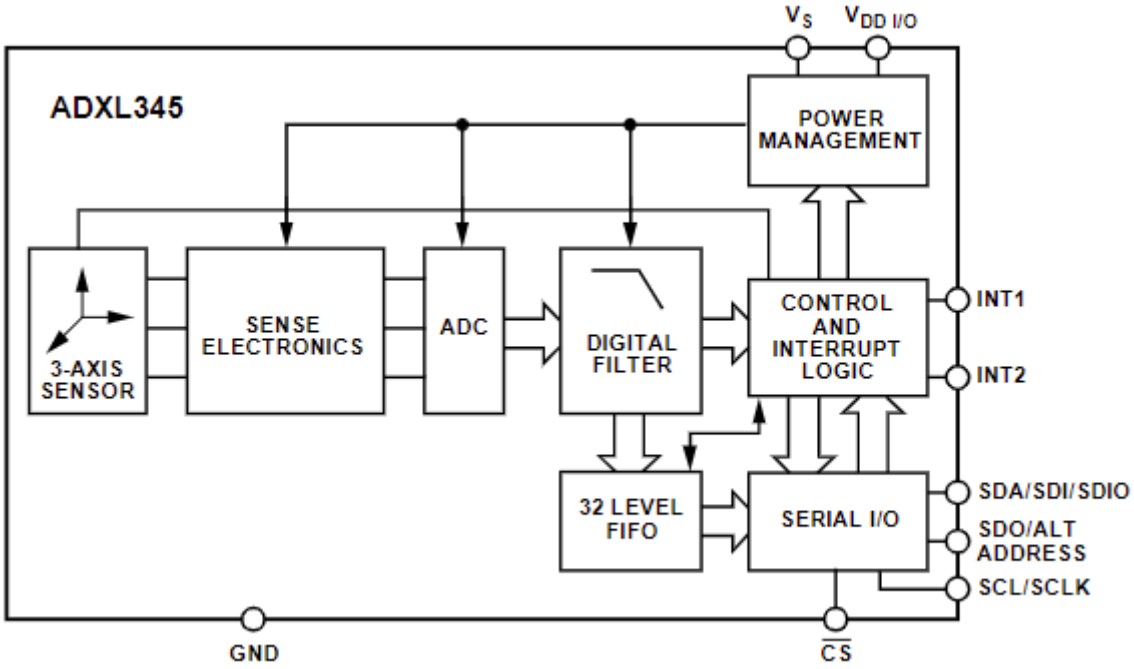

Fig. 3. ADXL345 Functional block diagram (Analog Devices, 2009)

The ADXL-345 can communicate other hardware using I2C and SPI protocols and the range of the measurements is user-programmable between the options: ± 2, ± 4, ± 8 and ± 16 g. Measurement ranges and bandwidth are selectable via serial command. As the sensor is of small sized dimensions of 3 mm × 5 mm × 1 mm and has to be powered with a voltage between 2 and 3.6 V. The sample frequency can be chosen from 0.1 Hz to 3.2 kHz (Analog Devices, 2009).

2.1.2. MPU-6050 three-axis accelerometer and gyroscopic sensor device

The MPU-6050 chip of Invensense is an integrated 6-axis device that combines a 3-axis gyroscope, 3-axis accelerometer. For digitizing the gyroscope outputs it has three 16-bit analog-to-digital converters and three 16-bit ADCs for the accelerometer outputs. The device also has a user-programmable gyroscope full-scale range of ±250, ±500, ±1000, and ±2000°/sec (dps) and a user-programmable accelerometer full-scale range of ±2g, ±4g, ±8g, and ±16g for precision tracking of both fast and slow motions. The gyroscope portion of the device measures the angular velocity due to the Coriolis effect and this causes a vibration determined by a capacitive accumulation (InvenSense, 2013). Figure 4 illustrates the MPU-6050 architecture diagram.

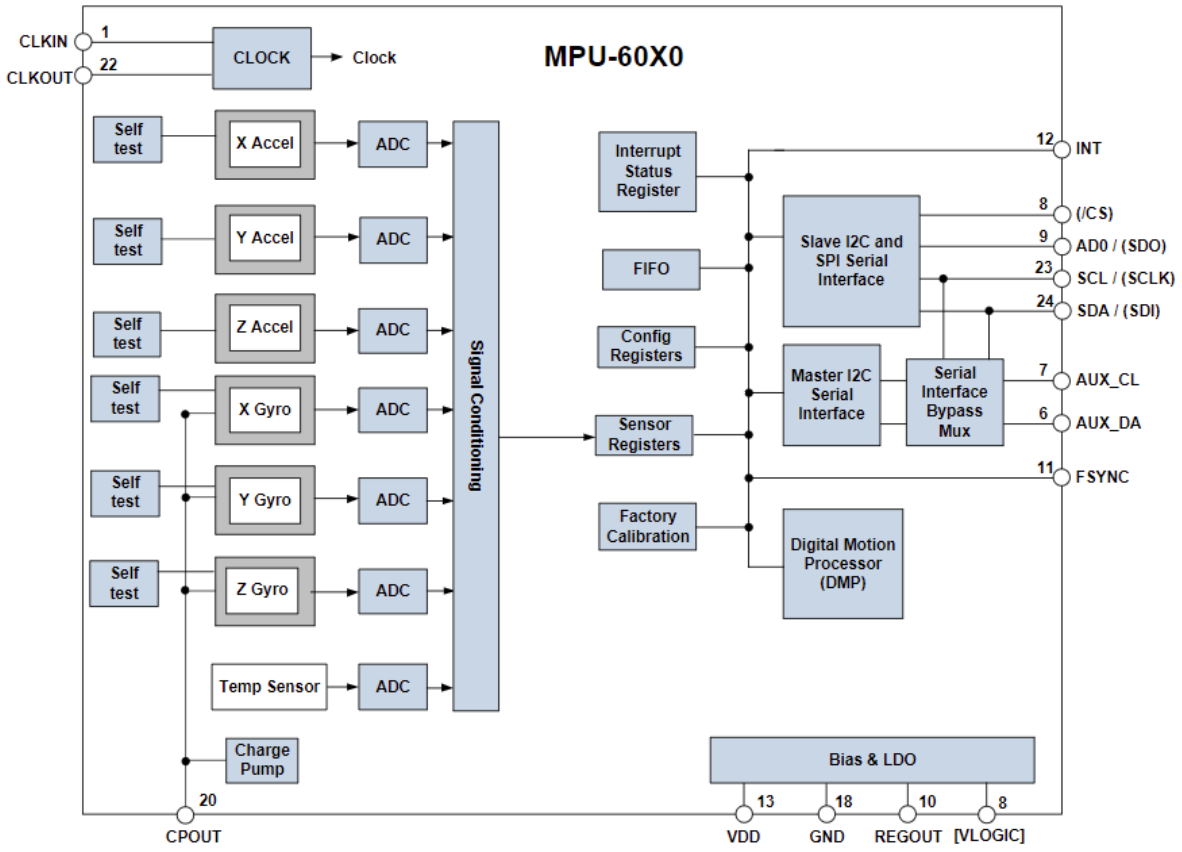

Fig. 4. MPU-6050 Architecture diagram (InvenSense, 2013)

The MPU-6050 widely used in many applications; for example, toys, handset and portable gaming, video/still image stabilization, security/authentication, no touch user interface application control/navigation, motion-enabled game and application framework, gesture short-cuts, gesture recognition, motion-based game controllers, 3D mice, wearable sensors for health, fitness, 3D remote controls, set top boxes, and sports etc.

2.2. Signal Similarity Methods

In order to obtain meaningful results from the accelerometer and gyroscope data, some statistical and heuristic methods should be used. To differentiate between different patterns, a rational measure from a statistical approach or from an intuitive approach is needed. When statistical methods are considered, correlation calculations are made in order to determine the similarity of the signal (Lee and Shin, 2014).

Signal cross correlation and autocorrelation information are helpful in light of the fact that such recipe give us how much the signal are connected with another by the numeric esteem. Similarity measure delivers helpful information to pattern recognition and the clustering for data sets (Park et al., 2012).

Dissimilarity value also used for signal similarity analyse which is given in equation 1. It is easy to evaluate the dissimilarity between two series where n is a positive integer, M represents the length of the data series, and x_i and y_i symbolize the ith element of x and y data sets (Serrà and Arcos, 2014).

$$d_{Ln}(x,y) = \left(\sum_{i=1}^{M}(x_i - y_i)^n\right)^{\frac{1}{n}} \quad (1)$$

A simple extension of the Euclidean distance is not to calculate directly using raw data sets, but by using the properties extracted from it. For example, the time series can be represented by their Fourier coefficients (FC), where x_i and y_i are complex value pairs symbolizing the ith Fourier coefficient of x_i and y_i, the discrete Fourier transforms (DFT) of the raw data sets (Serrà and Arcos, 2014).

$$d_{FC}(x,y) = \left(\sum_{i=1}^{0}(x_i - y_i)^2\right)^{\frac{1}{2}} \quad (2)$$

When l represents the lag value for data series the cross corelation between x(n) and y(n) series is defined as equation 3 and equation 4, respectively.

$$r_{xy}(l) = \sum_{n=-\infty}^{\infty} x(n)y(n-l) \quad l = 0, \pm1, \pm2, \ldots \quad (3)$$

$$r_{xy}(l) = \sum_{n=-\infty}^{\infty} x(n+l)y(n) \quad l = 0, \pm1, \pm2, \ldots \quad (4)$$

To calculate the correlation coefficient within the same time series we use the auto correlation of x(n) with l lag value is given in equation 5 and equation 6.

$$r_{xx}(l) = \sum_{n=-\infty}^{\infty} x(n+l)x(n) \quad l = 0, \pm1, \pm2, \ldots \quad (5)$$

$$r_{xx}(l) = \sum_{n=-\infty}^{\infty} x(n-l)x(n) \quad l = 0, \pm1, \pm2, \ldots \quad (6)$$

When normalised cross correlation value between x(n) and y(n) is needed equation 7 can be used.

$$\rho_{xy}(l) = \frac{r_{xy}(l)}{\sqrt{r_{xx(0)}r_{yy(0)}}} \quad (7)$$

3. RESULTS

The accelerometer and gyroscope data obtained from two different devices can be analyzed simultaneously with the developed analysis software. Accelerometer and gyroscope information are displayed graphically to mark the axes to which it belongs. Two graphical screens are used for this purpose. All of the data can be drawn all at once, or the axis information can be selected separately.

It is possible to change the lag values with the help of sliders under the graphical screens. Thus users can shift the graphs over each other and overlap them when desired. After each scrolling and zooming operation, the correlation values and the basic statistical values (max, min, average, standard deviation) are recalculated and displayed simultaneously on the screen. The data for each axis is drawn in different colors so that the visual complexity is reduced. In order to realize visual and statistical similarity analysis quickly, user can manage zoom in and zoom out operations just using zoom in slider effortlessly. Figure 5 shows the screenshot of the analysis software developed.

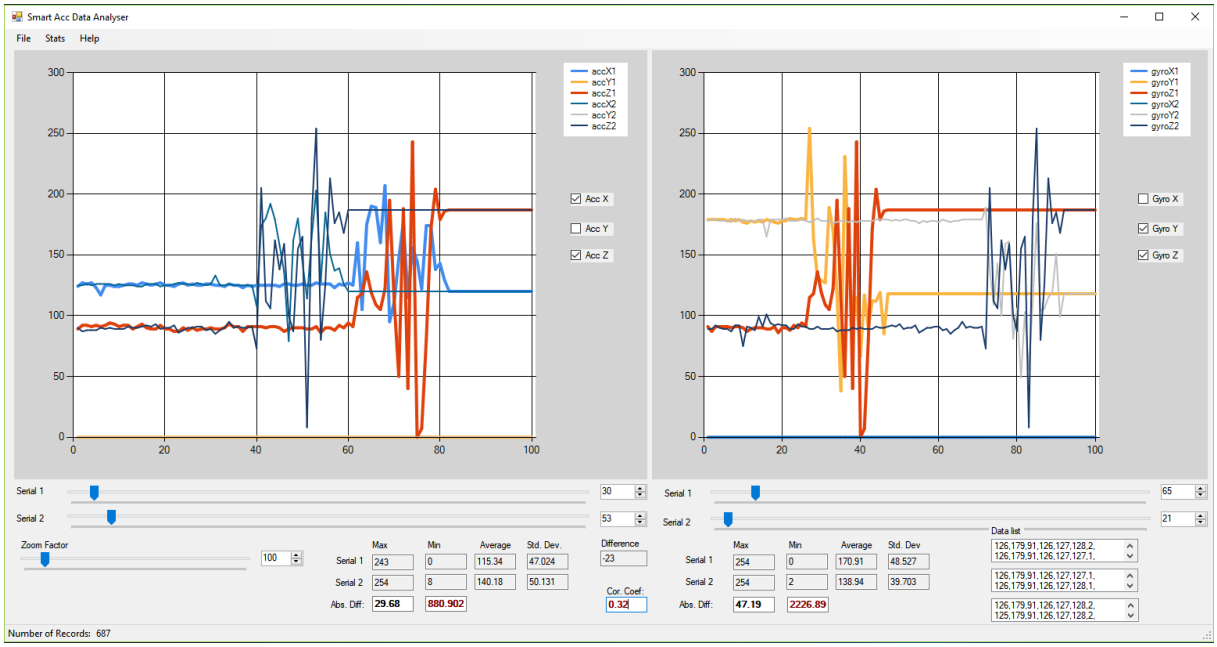

Fig. 5. Screenshot of the developed analysis software

It is also possible to generate statistical reports of the data sets in the stats section of the software. In Equations 1, 2, 3, 5 and 7 the calculation method is presented to the user by calculating the given statistic expressions. Then the results can be saved as a text file. The screenshots of the graphics also can be saved as a separated image file.

On the left side of the screen, the graphical section is used to analyze the accelerometer data, while the graphical section on the right hand side is used for gyroscope data. Figure 6 shows the graphical area where the accelerometer data is processed.

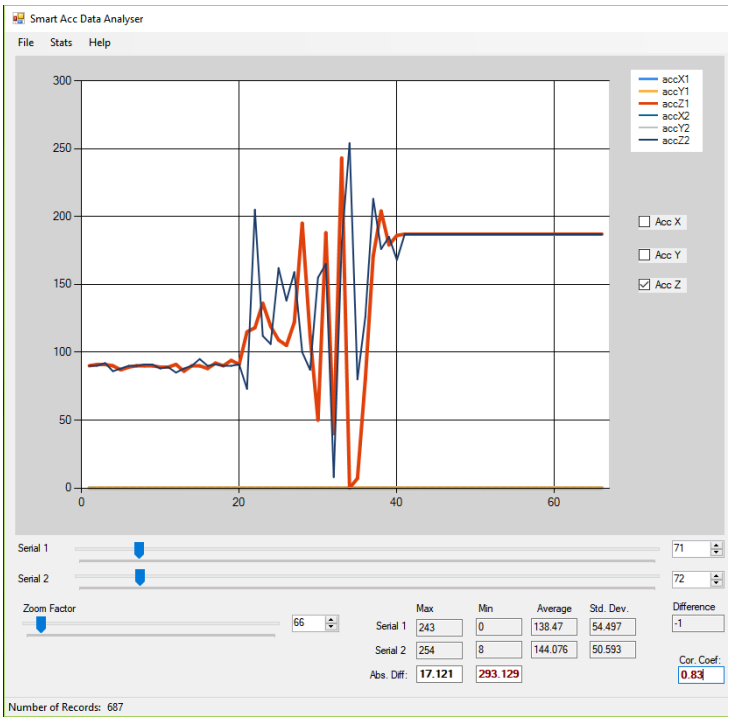

Fig. 6. Screenshot of the left hand side of analysis software

4. DISCUSSION

Nowadays, sensor technology has become cheaper and widespread, and it has expanded the use of sensors in many devices we use in our daily life. Especially accelerometers and gyroscope sensors have been used in different application areas such as toys, portable gaming, handsets, medical instrumentation, pointing devices, industrial automation, personal navigation devices, fitness equipment, hard disk drive protection, image stabilization, authentication, user interface application control, navigation, motion-enabled application framework, gesture short-cuts, gesture recognition, 3D mice, wearable sensors for health, vibration analysis, sports etc. However, the data obtained from these sensors must be interpreted.

For people, it is quite difficult to understand and interpret a large data set consisting of numbers at first glance. With the developed software and using sliders, the graphical interpretation of the data obtained from the sensors can be manipulate easily. In addition, statistical software analysis can be performed on the data sets by using statistical similarity analysis. The user can save the results in image and text files so that further analysis can be performed with other programs.

5. CONCLUSIONS

In this study, the basic information about the application areas of the accelerometer devices, working principles, technical specifications of the widely used sensors are presented. It is also an important process to make the information gathered from the sensors as meaningful as collecting raw data.

In the scope of our study, an analysis software has been developed to perform similarity analysis of accelerometer and gyroscope sensor data. Developed software can read signal data from a CSV formatted text file to compare the signals and shows the signal graphics on the computer screen. The signals can be shifted and zooming operations also can be performed. The developed interface also computes descriptive statistics for comparable accelerometer signals and calculates signal similarity ratios. After the manipulations, the results of the analysis can be exported to a text or an image file.

For further study, data processing, smoothing, clustering operations can be performed using artificial intelligence techniques on the sensor data.

ACKNOWLEDGMENTS

This research is supported by KOSGEB Research & Development Innovation and Industrial Application Support Program, grant 2018/620-5/01.

REFERENCES

1. Amerini I, Bestagini P, Bondi L, et al. (2016) Robust smartphone fingerprint by mixing device sensors features for mobile strong authentication. *Electronic Imaging* 2016(8): 1–8. DOI: 10.2352/ISSN.2470-1173.2016.8.MWSF-088.
2. Analog Devices AD (2009) ADXL345 Datasheet. Analog Devices. Available at: www.analog.com.
3. Garcia-Ceja E and Brena R (2013) Long-Term Activity Recognition from Accelerometer Data. *Procedia Technology* 7: 248–256. DOI: 10.1016/j.protcy.2013.04.031.
4. InvenSense I (2013) MPU-6000 and MPU-6050 Product Specification. InvenSense Inc. Available at: www.invensense.com.
5. Lee S and Shin S (2014) Gait Signal Analysis with Similarity Measure. *The Scientific World Journal* 2014: 1–8. DOI: 10.1155/2014/136018.

6. Park W, Lee Sangmin, Lee Sanghyuk, et al. (2012) Design Similarity Measure and Application to Fault Detection of Lateral Directional Mode Flight System. In: *Advances in Swarm Intelligence* (eds Y Tan, Y Shi, and Z Ji), Berlin, Heidelberg, 2012, pp. 183–191. Springer Berlin Heidelberg.
7. Serrà J and Arcos JLl (2014) An empirical evaluation of similarity measures for time series classification. *Knowledge-Based Systems* 67: 305–314. DOI: 10.1016/j.knosys.2014.04.035.
8. Varanis M, Silva AL, Brunetto PHA, et al. (2016) Instrumentation for mechanical vibrations analysis in the time domain and frequency domain using the Arduino platform. *Revista Brasileira de Ensino de Física* 38(1). DOI: 10.1590/S1806-11173812063.
9. Varanis M, Silva A, Mereles A, et al. (2018) MEMS accelerometers for mechanical vibrations analysis: a comprehensive review with applications. *Journal of the Brazilian Society of Mechanical Sciences and Engineering* 40(11). DOI: 10.1007/s40430-018-1445-5.