Journal of International Scientific Publications:
Materials, Methods & Technologies, Volume 7, Part 1
ISSN 1313-2539, Published at: http://www.scientific-publications.net

ABOUT THE NON-IDENTITY OF THE TECHNOLOGICAL IMPACT UPON ITS REPEAT REALIZATION IN THE CASE OF SURFACE PLASTIC DEFORMATION

Veselin I. Grigorov
University of Rousse, 7017 Rousse, 8 Studentska str., Bulgaria

Abstract

Discussed are the cases when during the repeated applying surface plastic deformation (SPD) there is a significant manifestation of alternative combinations and otter effect and factors in addition to the factor number of processing runs. Then there are signs of non-identity of their technological impact. except for the influence of the factor frequency of the processing, there are a significant availability of alternative combinations of effects and other factors and there are signs of non-identity of the technological impact. Such combinations occur in relation to: mismatch of the overlaying of contact zones; generation random characteristics of the technological impact; System-driven differences in the condition of contact interaction between the deforming elements and the machined surfaces.

Key words: *surface plastic deformation*

1. INTRODUCTION

Achieving the appropriate characteristics of treated surfaces by SPD is not only entails with choose of relevant scheme solutions, deforming elements, regimes and conditions of processing, but also with the specifics of the re-implementation of the technological impact. It is reasonable to assume that re-implementation of the technological impact is identical to its previous implementation, if with that is achieved only generates additional smoothing effect due to the increased multiplicity of the metal deformation in the same area of the treated surface. The identical repetition of the technological impacts in SPD, realized by tools with solid action, has the following characteristics whose compatibility are interpreted by the effect of Baushinger [Savov, 2011]:

- there is rapid attenuation of the effect of smoothing out the roughness within the several application of the technological impact in the same point of the treated area;
- with increasing output value of applied force of deformation the process of attenuation of smoothing effect after several impacts is accelerating;
- larger output values of the applied force of deformation determine the achievement of lower cumulative effect of smoothing carried out on behalf of the multiple impacts;
- after attenuation of the effect of frequency in the deformational effect on smoothing effect, further repetition of the technological impact can induce a state of over-cold deformation;
- other technological factors influence over the additional smoothing effect of repeated application of deforming force insofar as it relates to the manner of an overlay of the contact areas in the processing.

In cases when during the repeated exercise of SPD, except for the influence of the factor frequency of the processing, there are a significant availability of alternative combinations of effects and other

factors and there are signs of non-identity of the technological impact [Grigorov, 2012]. Such combinations occur in connection with:

- non-coincidence in superimposed of the contact zones;
- Generating attributes of the technological impact an accidental nature;
- Systematically determined differences in terms of the contact interactions between deformed elements and treated surfaces.

2. CREATING A MODEL – 1

Non-coincidence in overlapping of contact zones is a condition for non-identity that occurs in schemes with discontinuity of the interaction between the deformed elements and treated surfaces. While in the case of identity after a number of cycles it's reached to a coincidence of contact zones, in cases of non-identity after each successive cycle, the contact zone takes new position. If with angular parameter θ is determined the position of the point of the contact area on the circumference of the treated surface, the current meaning of θn +1 is set to the recurrent according

$$\theta_{n+1} = \theta_n + \omega(\mathrm{mod}1), \qquad (1)$$

where ω is the so-called rotational number [Panchev, 2001].

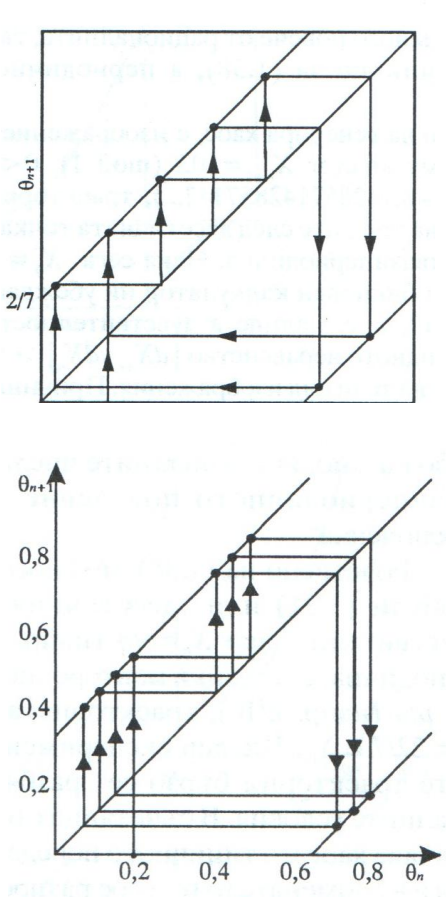

Fig.2

Operator (modl) "modulus" in this case means the dropping of the entire of the numbers when such occurs in serial iteration and when ω is a rational number (ω = p/q) the rotating number shows that the generant circumference of the treated cylindrical surface will be located q contact areas to and will superimpose again after p full revolutions (cycles).

Figure 1 presents a graphical the phase interpretation of dependence 1 to the sampling rate of ω = 2/7, and Figure 2 for - ω = 1 / π [Panchev, 2001]. Graphics of both figures include two parallel lines located parallel on both sides of the diagonal, for which ω = 0.

On one figure shows the formation of a closed trajectory, resulting in 7 iterations, while the other figure the trajectory remains unclosed after its multiple recurrence, which is shown in Figure 2. Both trajectories are qualitatively different as in the one case the closure of the cycle follows the frequency value in the fraction 2/7 = 0.2857142857142 ... and the other is manifested in quasi-periodicity caused by the proximity of consecutive cycles of the trajectory.

Generation of characteristics of the technological impact with accidental nature is expressed through the scattering factors for variables that define them. Such are the:

- caused patches of tangential force component of deformation with a corresponding stochastic fluctuations of the values of its tangential and radial components;
- Variance of dimensions of the treated area or setting errors that determine the tightness, respectively, the radial force component of deformation;
- Change in terms of contact interactions resulting from the conversion of the characteristics of the profile roughness, represented by the change in the statistical characteristics.

Stochastic nature of the following characteristics, and their handling are ensured by:

- Use of the percussion and deforming rolls with shifted center of gravity [Savov, 2011, Grigorov, 2012];
- Implementation of the model for crushing the roughness baseline values of the step parameters that determine the development of non-cooperative the plastic outbreaks under the protrusions base [Grigorov and Sakakushev, 1999, Sakakushev and Grigorov, 2001, Sakakushev and Grigorov, 2002];
- Frequency of separator rotation of the percussion rolls under the condition of constancy of the power of deformation effects [Savov, 2011, Grigorov, 2012].

The technical implementation of the above-mentioned condition is possible when using an instrument with a dynamic action, operating in accordance with the scheme illustrated in fig.3. In conformity with this scheme the cylindrical striking roller 6, that carry out the implementation of the technological impact [Grigorov, 2012], are included in the construction of the instrument.

The striking rollers are placed in the separator sockets 4, and simultaneously wits them perform a rotating movement around the instrument axis. Periodically when they meet the deforming rollers 3, they interact with a strike on them, whilst the loose bearing shaft 5, performs as a solid base. The deforming rollers together with the separator 2, participate in the rotating action and along with this roll over the processed surface of the fixed workpiece 1. The rotating movements of the separator are presented with different angular velocities. The correlation between them is defined by a constant kinematics connection, where the leading link is the separator of the rollers and the one that follows is the separator of the striking rollers. In this case it is possible to control the capacity of the technological impact by transforming the rotating frequency of the separator that controls the striking rollers**.**

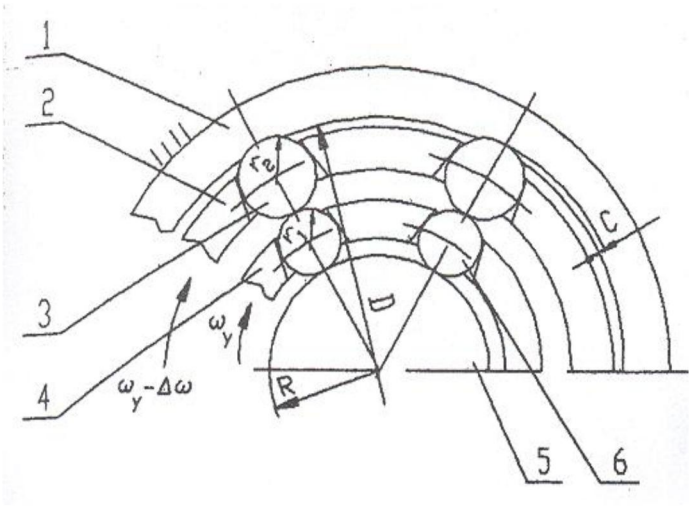

Fig.3.The instruments used

3. CREATING A MODEL – 2

In conforming with the kinematics of the tool, operating as described above, the radial location of the axis of deforming rollers and the value of their radial displacement as a result of the contact with the striking rollers in determined by the following dependences

$$\rho = (R + r_1).\cos\Delta\omega.\left(\frac{t_0}{2} - t\right) + \sqrt{(r_1 + r_2)^2 - (R + r_1)^2.\sin^2\Delta\omega.\left(\frac{t_0}{2} - t\right)} \quad (2)$$

$$\Delta\rho = \rho - R - 2.r_1 - r_2 + C \quad (3)$$

where ρ is radius-vector, describing the location of the axis of the deforming rollers

R - radius of the shaft

r_1 - radius of the cylindrical striking rollers

r_2 - radius of the cylindrical deforming rollers

$\Delta\omega$ - difference between the angular speeds of the separators of the striking and deforming rollers

t_0 - time of interaction between the striking and deforming rollers

t - current value of time after the contact between the striking and deforming rollers

$\Delta\rho$ - radial displacement of the axis of the deforming rollers after contact with the striking rollers.

C - tightness expressed as the difference between the tool operating size and the hole diameter

ISSN 1313-2539, Published at: http://www.scientific-publications.net

In cases where the elastic deformations of the walls of the hole being processed are greater than the contact deformations occurring as a result of the interaction of its surface, with the deforming force being in a direct ration to $\Delta\rho$ [Grigorov, 1990], then the power of the deforming action may be represented by the following dependence

$$N = K.\Delta\rho.\frac{d\rho}{dt} \quad (4)$$

where N is power of technological action

K - coefficient of proportionality between the deforming force and $\Delta\rho$.

When a constant power of deforming action (N is constant) is required for two components of different values of tightness C, the relationship between the corresponding angular speeds of the separator of the striking rollers may be obtained on the grounds of the following system of differential equation

$$\Delta\rho_1.\frac{d\rho_1}{dt} = \Delta\rho_2.\frac{d\rho_2}{dt} \quad (5)$$

$$\frac{d\Delta\rho_1}{dt}.\frac{d\rho_1}{dt} + \Delta\rho_1.\frac{d^2\rho_1}{dt^2} = 0 \quad (6)$$

$$\frac{d\Delta\rho_2}{dt}.\frac{d\rho_2}{dt} + \Delta\rho_2.\frac{d^2\rho_2}{dt^2} = 0 \quad (7)$$

where ρ_1, ρ_2 is radius-vectors, describing the location of the axis of the deforming rollers

$\Delta\rho_1, \Delta\rho_2$ - radial displacements of the axis of the deforming rollers after contact with the striking rollers corresponding to $C=C_1$ and $C=C_2$

Taking into account that $\Delta\rho = \rho - q$, $q = R + 2.r_1 + r_2 - C$, Eqs. (6) and (7) may be expressed by the following summarized dependence

$$\left(\frac{d\rho}{dt}\right)^2 + (\rho - q).\frac{d^2\rho}{dt^2} = 0 \quad (8)$$

After substitution $\frac{d\rho}{dt} = y$, Eq. (8) is transformed into a differential equation of first series

ISSN 1313-2539, Published at: http://www.scientific-publications.net

$$(\rho - q).\frac{dy}{d\rho} = -y^2 \qquad (9)$$

By repeated integration and division of the variables, the solution of Eq. (9) is obtained as

$$\frac{(\rho - q)^2}{2} = Q_1.t + Q_2 \qquad (10)$$

The two integrating constants Q_1 and Q_2 are definable by the limits $t = 0$, $\rho - q = 0$ and $t = t_0/2$, $\rho - q = C$, according to which $Q_1 = C^2/t_0$, and $Q_2 = 0$.

After substitution of constants Q_1 and Q_2 Into Eq. (10)

$$\frac{(\rho - q)^2}{2} = C^2.\frac{t}{t_0} \qquad (11)$$

By differentiation of Eq. (11), the following dependence is obtained

$$(\rho - q)\frac{d\rho}{dt} = \frac{C^2}{t_0} \qquad (12)$$

The left side of Eq. (12) is a complete analogue of Eq. (5), from which results

$$\frac{C_1^2}{t_{01}} = \frac{C_2^2}{t_{02}} \quad \text{or} \quad t_{02} = t_{01}\frac{C_2^2}{C_1^2} \qquad (13)$$

where t_{01}, t_{02} is two different value of t_0, carried out corresponding to $C=C_1$ and $C=C_2$.

If the corresponding analytical expression, reflecting the kinematical dependence between time t_0 and the angular speed of the separators [Grigorov, 2012] is substituted into Eq. (13), then the latter becomes

ISSN 1313-2539, Published at: http://www.scientific-publications.net

$$\omega_{y2} = \omega_{y1}.\frac{C_1^2}{C_2^2}.\sqrt{\frac{1-U_2^2}{1-U_1^2}} \qquad (14)$$

where ω_{y1}, ω_{y2} is two different value of ensuring N=constant, corresponding to $C=C_1$ and $C=C_2$

U_1 and U_2 are value of dimensionless quantity U, defined for $C=C_1$ and $C=C_2$ according to the

following dependence

$$U = \frac{(R+2.r_1+r_2-C)^2+(R+r_1)^2-(r_1+r_2)^2}{2.(R+2.r_1+r_2-C)(R+r_1)} \qquad (15)$$

Systematic determined differences in the conditions of contact interaction between the deforming elements and treated surfaces are available in:

- skid caused by the conical of the deforming roller with schemes of its radial feeding;
- Implementation of a cross or directional schemes with combination of SPD with the preceding cutting through schemes with axial feeding of the deforming rollers;
- Occurrence of "ending effect" in cases of suspension of the treated surface through schemes with axial feeding of the deforming rollers.

The conical of the deforming roller is a source of systematic differences in terms of their contact interaction with treated surfaces due to dissimilar quantitative expression of skid and contact pressure along the contact zone. In reversing the treated surface (left or lower forehead becomes right-hand or top and back) a repeat applying of SPD so that the areas, in which it has been exercised less contact pressure, to undergo and its bigger values. Then arises change of the conditions and in terms of the skid.

4. CREATING A MODEL – 3

Skidding in the contact between the elements of the technological system (surface of the machined hole, deforming roller and support cone) when machining of holes through tools with long conical rollers can be estimated by establishing specific values for the angular speeds of the support cone and the deforming rolls in their absolute movement and relative angular movement of the separator cone for specified period of time. Relevant of these movements and time intervals angular speeds are determinable by the formula

$$\omega = \frac{\Delta\gamma}{\Delta t}\ , \qquad (16)$$

where ω is the angular velocity of the element of the instrument;

ISSN 1313-2539, Published at: http://www.scientific-publications.net

$\Delta\gamma$ - angular displacement of the respective element for specified intervals of time;

Δt - the period of time for implementation of angular displacement $\Delta\gamma$.

The angular velocity of the separator in its absolute motion is determined by the formula

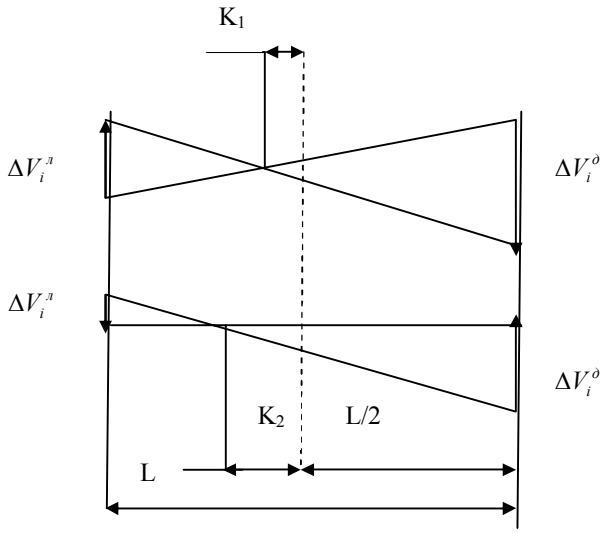

Fig.4. Plan of speeds in contact of the rolls with the support cone and the workpiece

$$\omega_c = \omega_1 - \omega_2, \tag{17}$$

where ω_1 is the angular velocity of the support cone;

ω_2 - the angular velocity of the separator through its relatively motion.

With the defined values of the angular speeds are calculated linear speeds of the contact points of the deforming rollers and the support cone in the end radial sections of the detail. The graphical representation of the linear speeds at these points, which in the case of a stationary workpiece is illustrated by plan velocities (Fig. 4) allows determination of skidding as the difference of the respective linear speeds.

Coordinate of the point Ki with zero skid (K_1 and K_2 are dependent) determined toward the average radial cross section is given by

$$K_i = \frac{L}{2} \cdot \frac{\left|\Delta V_i^л\right| - \left|\Delta V_i^д\right|}{\left|\Delta V_i^л\right| + \left|\Delta V_i^д\right|}, \tag{18}$$

where i is index to denotation of the roller contact with the support cone (i = 1) or with the detail (i = 2);

$\Delta V_i^л$ - skidding in the left section of the outlet according to the value of i;

$\Delta V_i^д$ - skidding in the right section of the outlet according to the value of i;

L - contact length of the deforming roller with the workpiece or the support cone.

After turning the workpiece aperture for re-treatment with the same regimen, overlapping of the contact zones between the deforming rollers and the workpiece in both establishments differentiate three sections in the axial direction. Moreover, there is no reason to expect a change in the values of the parameters K_1 and K_2.

The average of the plots is wide $2K_2$ and skidding in it is one way and with equal total amount. Symmetrically of the average there are two end sections with width $L/2 – K_2$, in which takes place bidirectional skid with a predominance of one of the directions. Simultaneously, in the sections where at the first establishment contact pressure was less due to the bigger diameter of the deforming rollers in the second establishment borne impacts with bigger values of the pressure in the contact zone. The represented distribution of the sections of the treated surface corresponds to a more similar characteristic of their working conditions, which determines the increasing homogeneity of the resulting roughness at equal multiplicity of deformational effects, but by using variant of the two treatment establishments instead of one. There is an option of replacing the second establishment with second transition, when using construction of two-line tool with reverse conical of the deforming rollers [Grigorov, Karshakov, Kostadinov and Petrov, 2008].

The occurrence of "ending effect" in cases of suspension of the treated surface (typically the transition of opening and adjacent forehead) in schemes with axial feed rollers of the deforming generate non-identity with macro geometric nature depending on whether repeated exercising of SPD is after discontinuation by rotating the workpiece. When accomplished turn achieves greater homogeneity of deviations from the right cylindrical shape adjacent to break zone of the hole surface [Grigorov, 2011].

5. CONCLUSIONS

Presented analysis of the terms and conditions of non-identity for repeated exercising of SPD shows that these are the circumstances and conditions that provide alternative options and outcomes associated with achieving better properties of the treated surfaces.

REFERENCES

S. I. Savov. Complete processing through surface plastic deformation of openings using intermittent motion tools or single radial supple. PhD ABOUT DEFENDED DISSERTATION, Ruse University "*A. Kanchev",* Bulgaria, 2011, p.175

V. I. Grigorov. Quality assurance of surfaces, processed using SPD in parallel or sequential combination with preceding cutting. DSc ABOUT DEFENDED DISSERTATION, Ruse University *A. Kanchev,* Bulgaria, 2012, p.318

S. Panchev. Theory of Chaos. Academic Publishing House *"Prof. M. Drinov",* Sofia, Bulgaria, 2001, p.452 ISBN 954-430-725-7

V. I. Grigorov, B. B. Sakakushev. Plastic deformations propagation modeling with SPD of surfaces having a coarse pitch of the irregularities. Proceedings Technical University of Gabrovo, Bulgaria, 1999, pp.195-200 ISBN 954-683-098-4

B. B. Sakakushev, V. I. Grigorov. Experimental study to ironing the roughness with stride through instruments for SPD with radial feding. Proceedings Ruse University "*A. Kanchev",* Bulgaria, 2001, volume 38, pp.44-48 ISSN 1311-3321

B. B. Sakakushev, V. I. Grigorov. To practical check of dependence for definition of parameters to a plastic under are deformed of tops at not cooperating among themselves plastic zones. Proceedings Ruse University "*A. Kanchev",* Bulgaria, 2002, volume 39, pp.28-30 ISSN 1311-3321

V. Grigorov, M. Karshakov, S. Kostadinov, P. Petrov. A two-line tool for surface plastic deformation of cylindrical holes when combining conical rolls with opposite conicities. Proceedings AMD'2008, Publishing House of Technical University Sofia, Bulgaria, 2008, pp.97-101, ISSN 1310-3946

V. I. Grigorov. Opportunities for combining consecutive of cutting or SPD and in achieving more homogeneous machined surfaces. Journal proceedings of the Union of Scientists – Ruse, Technical sciences, 2011, pp.10-13, ISSN 1311-106N

V. I. Grigorov. Finishing Processing through SPD of holes in thin and non-equal details and tools through a dynamic action. PhD ABOUT DEFENDED DISSERTATION, Sofia, 1990.