Journal of International Scientific Publications:
Materials, Methods & Technologies, Volume 7, Part 2
ISSN 1313-2539, Published at: http://www.scientific-publications.net

A SOFTWARE FOR MODELLING OF PLASTIC INJECTION MOULDS

Yahya Hışman ÇELİK[1], Cebeli ÖZEK[2], İhsan PİLATİN[3]

[1]Mechanical Engineering Department, Faculty of Engineering-Architectural, Batman University, Turkey, E-mail: yahyahisman.celik@batman.edu.tr, yahyahisman@gmail.com.

[2]Mechanical Education Department, Faculty of Technical Education, Fırat University, Turkey

[3]English Lecturer of Batman University, Turkey

Abstract

The fact that plastic products are used more and more in every field of industry increases the importance of clean, seamless and easy manufacturing. This is why choosing the correct parameters for plastic injection moulding and calculating them precisely is extremely important. In this study, software was developed to model plastic injection moulds. The developed software was prepared using the Delphi 7.0 programming language. When preparing the software, factors such as injection machines, moulding materials, plastic materials, additives, and the geometric shapes of the products were taken into consideration. The necessary calculations required to be carried out on the moulding material such as the number of mould cavities, injection time of the moulded product, cooling time, the amount of volumetric shrinkage, the clamp pressure, the mould cost, and the cost of the moulded product are done depending on these factors. Artificial Neutral Networks (ANN) and optimisation techniques were used in calculation operations. In conclusion, as the developed software produces numerical estimated values for all of the data listed, data regarding plastic injection moulding is obtained quicker and the data obtained is a lot more reliable.

Key words: *Plastic Injection Moulds; Intelligent Systems; Cost; Optimizing; Software.*

1. INTRODUCTION

Plastic injection manufacturing is a manufacturing method where the melted plastic material is injected into the mould cavity, shaping the product with the required geometrical shape, and the product is removed after cooling down. Using this method simplifies the production of seamless plastic materials at desired shapes and dimensions. Injection moulding parameters and the cost of moulds and plastic products play an important role when obtaining these products.

There are not many software programmes in relation to plastic injection moulding methods that are used widely today. The programmes that are available do not address in detail the issues experienced in plastic injection moulding methods; hence, the reason why a software programme has been developed to analyse the issues experienced in plastic injection moulding methods in detail. Certain criteria are required to calculate the real mould cost; moulding materials, design, labour costs, workbench process costs, special process expenses, general administrative-operating expenses, depreciation, and profit are some of the categories used for the criteria (Breyce, 1996). The most important factors that affect the cost of the moulds are factors like the geometric properties of the sample to be manufactured, the number of mould cavities to be processed, the usage area of the mould, the workbench process time, design, and labour costs (Kazmer, 2007). Out of these factors operational costs, material costs, and other expenses affect the overall cost by 25%, 20%, and 55%, respectively (Koyun, 2005). The geometric property of the sample and the mould cavity number is accepted as the

most important parameter during moulding (Menges et al., 2001). The mould cavity measurements can be found by considering the shrinkage and warpage rates of the moulded plastic products (Ferreira and Mateus, 2003). The plastic's flow length must be taken into account when calculating the mould cavity. The temperature of the melted plastic, the temperature of the mould, the injection time, the cooling time, the ironing time, and the injection pressure are all important factors that affect the flow length (Chen et al., 2000). In the event that all the parameter values are calculated ideally, the melted plastic mould cavity will be filled in the best possible way (Lau et al., 1999). The cooling process starts once the mould cavity is filled with the melted plastic (Uluer, 2008). To make sure that the moulded plastic product is cooled homogeneously, the cooling channels must be circulated to the maximum over the mould surface (Ergüney et al., 2005). As heat conductivity increases when the cooling channels are close to the moulded area, the cooling time of the moulded product will be shorter and the optimum measurement integrity will be obtained (Shelesh-Nezland and Siores, 1997). Together with developing technology, new methods have been developed for cost calculation, as opposed to using the classic methods (Gao and Wang, 2009). These developed methods are used to design software programmes that carry out estimated cost calculations in a computerised environment for the cost of plastic injection moulding (Karaağaç and Özdemir, 2005). Artificial Neutral Network models are among the methods developed to reach the most ideal result based on more than one parameter (Özek and Çelik, 2012). While parameters such as different plastic materials, the mould temperature, and the temperature of the melted plastic material are inputted into the artificial neutral network model, values based on these parameters such as the injection time and the injection pressure are trainable (Chen, 2010); by this way some evaluations are made regarding moulding parameters (Sadeghi, 2000). Some evaluations are that the injection pressure gives rise to 58% warpage, the injection time gives rise to 15% warpage, the ironing time gives rise to 23% warpage, and the cooling time gives rise to 4% warpage; the injection pressure gives rise to 84% shrinkage, the injection time gives rise to 5% shrinkage, the ironing time gives rise to 8% shrinkage, and the cooling time gives rise to 3% shrinkage (Oktem et al., 2005). In order to obtain an optimum measurement integrity taking into account the shrinkage and warpage amounts, the injection and cooling times need to be optimum (Özek and Çelik, 2012). Just like the injection and cooling times, injection parameters, mould costs, labour, general administrative-operational expenses (Çelik and Özek, 2009), and profit also affect the cost of the moulded plastic product (Çelik et al., 2010).

In this study, a software programme was developed for the modelling of plastic injection moulds. The developed software programme calculates the number of mould cavities that are effective in the mould shape, the injection time of the moulded product, the cooling time, the volumetric shrinkage amount, the clamp pressure, the cost of the mould and moulded product using optimisation techniques and Artificial Neutral Networks (ANN).

2. THE AIM OF THE STUDY

The fact that using computers has become more common as technology has continued to develop has directed humans to discover quicker, more reliable, and practical solutions to their issues. This is why when resolving issues programmes created in computerised environment come to the forefront compared to conventional methods. While there are software programmes available to resolve some issues, some are still resolved using conventional methods; this directly affects the reliability of the result as well as not being time efficient.

There are not many software programmes in relation to plastic injection moulding methods that are used widely today. The programmes that are available do not address in detail the issues experienced in injection moulding methods; hence, the reason why a software programme has been developed to analyse the issues related to injection moulding methods in detail.

3. MODELLING OF SOFTWARE

At first a flow chart was created for modelling plastic injection moulds. Fig. 1 illustrates the created flow chart.

The software programme developed, using the programming language Delphi, for modelling plastic injection moulds, has three parts in general; data information input, optimum design, and help. Fig. 2a illustrates the splash screen of the programme. Information needs to be defined manually in order for the developed programme for modelling plastic injection moulds to create optimum designs, ANN calculations, and cost calculations; hence, the reason why data information input screens have been added to the programme. These screens are defined as adding information, delete, listing, and updating. Fig. 2b illustrates the plastic material data information input screen requires to carry out these definitions.

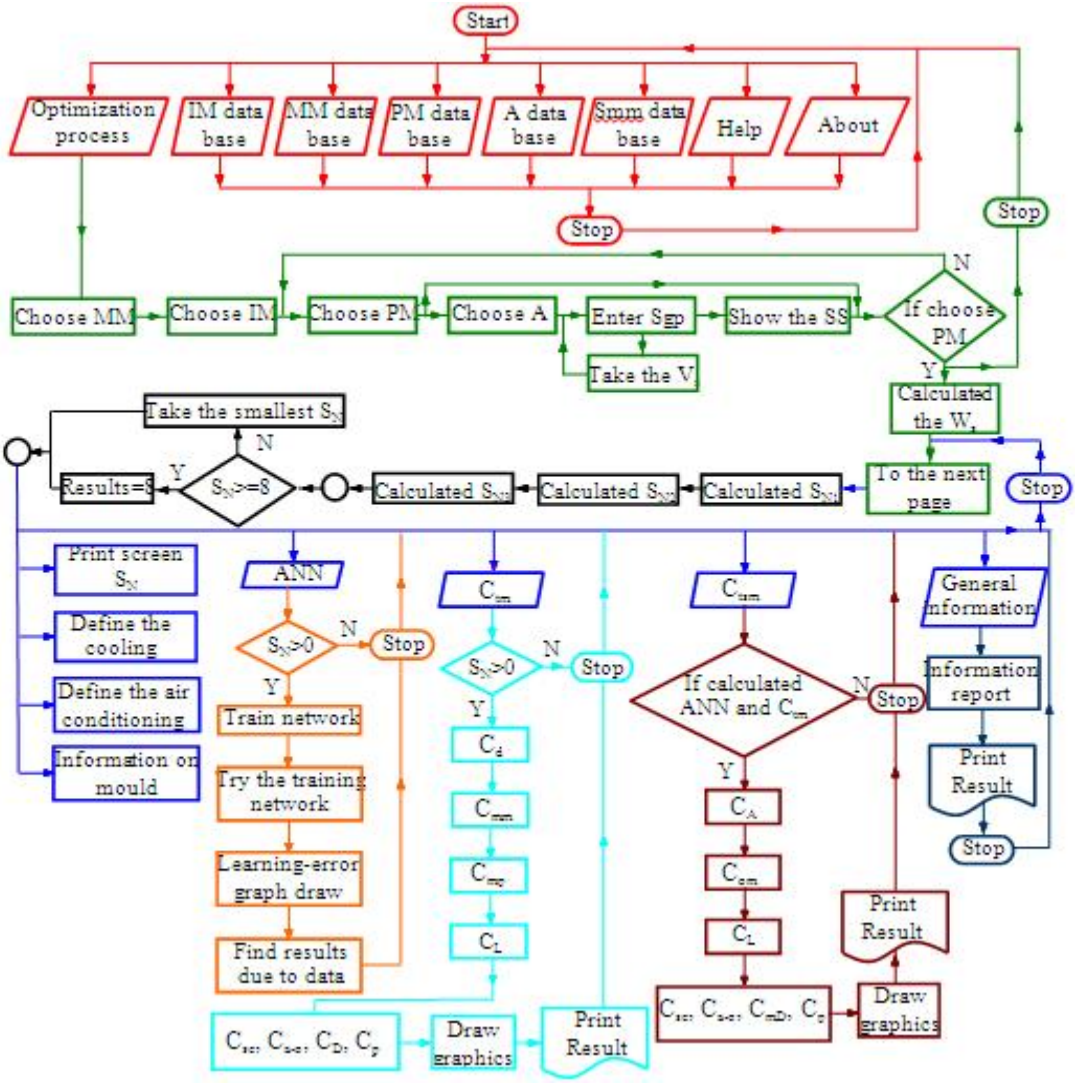

Fig.1. Flow chart of programme

Inputting data information enables the properties of mould materials, plastic materials, plastic injection machine types, standard mould elements, and additives to be defined in the programme.

The programme has the fundamental programme buttons such as “ADD,” “DELETE,” “LIST,” and “UPDATE.” The “ADD” button allows information input to the programme according to the injection parameter properties, while the “DELETE” button allows you to delete information previously recorded in the programme.

The “LIST” button allows you to see which information is recorded on the previously chosen database, or allows you to view the technical properties of the information chosen, while the “UPDATE” button is used to amend information input incorrectly, or to update the chosen information. The programme uses the ANN model to calculate the number of mould cavities, the injection and cooling times, the amount of volumetric shrinkage, and clamp pressure by evaluating the inputted data; it also calculates the estimated cost of the mould and product to be manufactured by using optimisation techniques.

Fig. 3 illustrates the optimum design screen, which shows the information transferred from the database is chosen, the geometric properties of the plastic material to be produced using the plastic injection moulding method is defined, and the calculation process takes place in line with such information.

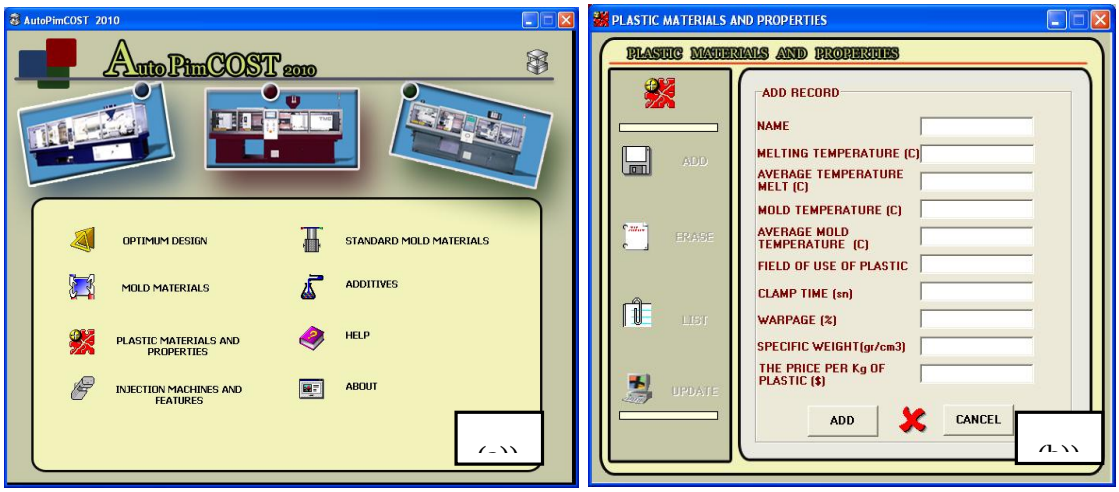

Fig.2. a) Opening screen of program, b) Data screen for the plastic material

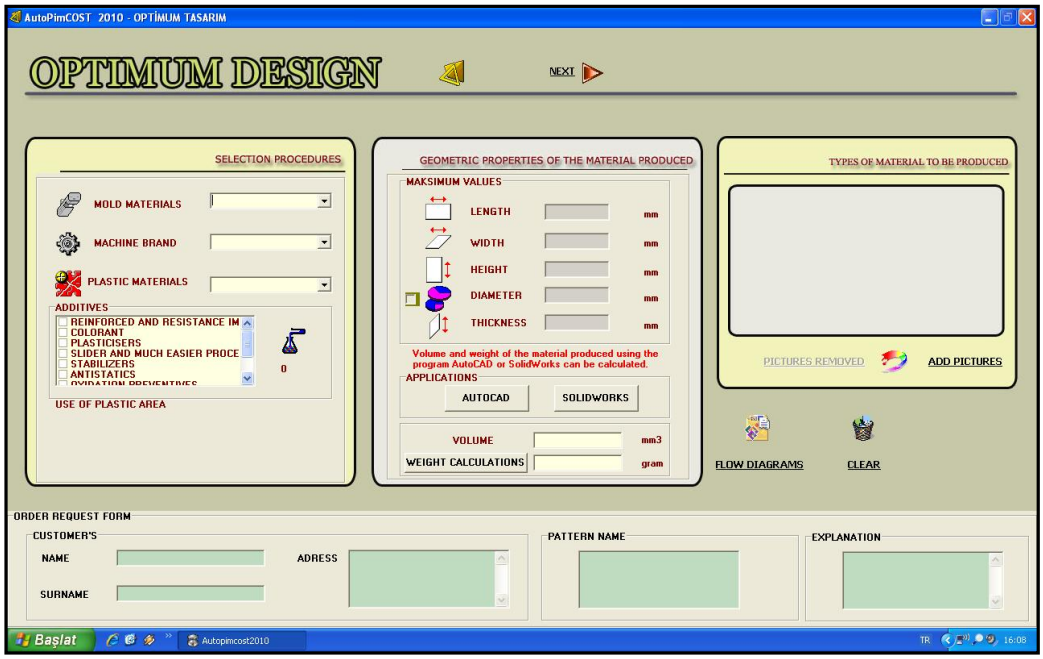

Fig.3. Optimum design screen

Fundamentally the optimum design screen has four sections. The first section has the properties of the mould material that is recorded on the database beforehand, the machine brand, the plastic material, and additives. Unless this information is chosen the programme will not allow options in the second section to be activated, which is the section that defines the geometric properties of the sample to be produced. In the event that additives are used in the moulding of plastic materials, it should be stated; if no additives are going to be used, this part should be left blank. Finally, when choosing the plastic material, the usage area of the plastic material will appear. The second section defines the geometrical properties of the product to be produced such as length, width, height, diameter, and wall thickness. Taking into account that the product to be produced has a possibility to have a complex structure, the maximum amount of measurements should be inputted. However, the maximum measurements of the sample cannot exceed the moulding dimension of the machine; otherwise, the programme will alert you accordingly. In the event that an alert occurs, it is necessary to either choose a new workbench that has a larger moulding dimension or decrease the sample dimensions. The third section is the section where the shape of the mould or sample, designed and recorded using design programmes such as SolidWorks or AutoCad, is shown. The pictures are recorded as JPEG files. Buttons such as "NEXT," used to see the shape of the flow chart, to clear the screen, and to continue to the next page are found in this section. The volumetric value of the product is seen by looking at the mass properties of the shape. After inputting this volume value, it is possible to calculate the weight of the sample by pressing the "calculate weight" button. In the programme, the weight of the sample, where no additives have been used is calculated using the equation below.

$$W_s = [(\ell_p \cdot V_s + \ell_p \cdot V_s \cdot S_p/100)/1000] \quad (1)$$

In the event that additives will be used, the ratio of the additive is calculated to be no more that 10% of the plastic material ratio; in which case the weight of the sample with additives is calculated using the equation below.

$$W_s = [(V_s \cdot ((0{,}9 \cdot \ell_p) + (0{,}1 \cdot \ell_a)) + V_s \cdot ((0{,}9 \cdot \ell_p) + (0{,}1 \cdot \ell_a)) \cdot S_p/100)/1000] \quad (2)$$

The fourth and last section has the order request form in order to gain technical information regarding the contents of the study carried out.

3.1. Values gained from the optimum design

Once all the parameters regarding injection moulding techniques are defined in the optimum design, the "NEXT" button is pressed. The software programme will calculate the number of mould cavities and the moulding dimensions in line with the information inputted. Determining the number of mould cavities (N_s) depends on the moulding length and width of the chosen injection moulding machine and the length and width of the sample. At this point, the programme calculates how many samples will be pressed by the injection machine (Ns_1); after which it calculates the weight of the sample, the rate of the amount of plastic the injection machine will inject in one go, and the number of samples the injection machine will inject in one go (Ns_2). Finally, it will calculate the number of samples in relation to the flow length (Ns_3). Initially the programme records the amount of samples to be printed in its memory, using the equations determined by studies carried out by Koyun (2005) and Menges et al. (2001), taking into account the geometrical properties of the plastic injection machine and the sample piece. At this point, the programme determines the number of mould cavities for the smallest amount of samples. In the event that the number of samples exceeds 8, the number of cavities will automatically become 8. When the number of mould cavities exceeds 8, the hot runner systems need to be used. The programme does not take into consideration the hot runner systems as they are a special subject. In conclusion, the programme calculates the maximum number of mould cavities as 8.

Once the number of samples is calculated, the real dimensions of the mould cavities are calculated, taking into account the shrinkage amounts of the chosen plastic material. The sample must be a bit larger than the real measurement when it is processed onto the mould; this is required due to the shrinkage amount of the plastic material. In every type of moulding the material that goes in hot will solidify and lose heat, and shrink when solidifying. Once the melted plastic starts to cool, it will shrink according to its shrinkage rate, and the sample will reach its real measurements (Koçak and Abalı, 2006). This is why moulds should be larger than the dimensions stated in the workpiece technical drawing (Malloy, 1994). When these dimensions are calculated in accordance with the shrinkage amount of the plastic material, the plastic piece produced will have measurement integrity. Fig. 4 illustrates the drawings and dimensions of a sample used to calculate the real dimensions of the mould cavity.

The real length of the piece to be processed into the mould cavity is calculated using the equation below.

$$L_r = [L_1 + L_1 \cdot S_p/100] \quad (3)$$

The real width of the piece to be processed into the mould cavity is calculated using the equation below.

$$W_r = [W_1 + W_1 \cdot S_p/100] \quad (4)$$

The real depth of the piece to be processed into the mould cavity is calculated using the equation below.

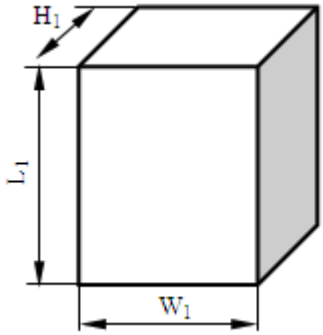

Fig.4. The sample product and size

$$H_r = [H_1 + H_1 \cdot S_p/100] \quad (5)$$

After determining the real moulding dimensions, the moulding dimensions of the injection mould is calculated. The mould dimensions are important when determining the mould material cost. Fig. 5 illustrates an example design drawing for determining the expressions used to calculate the mould dimensions.

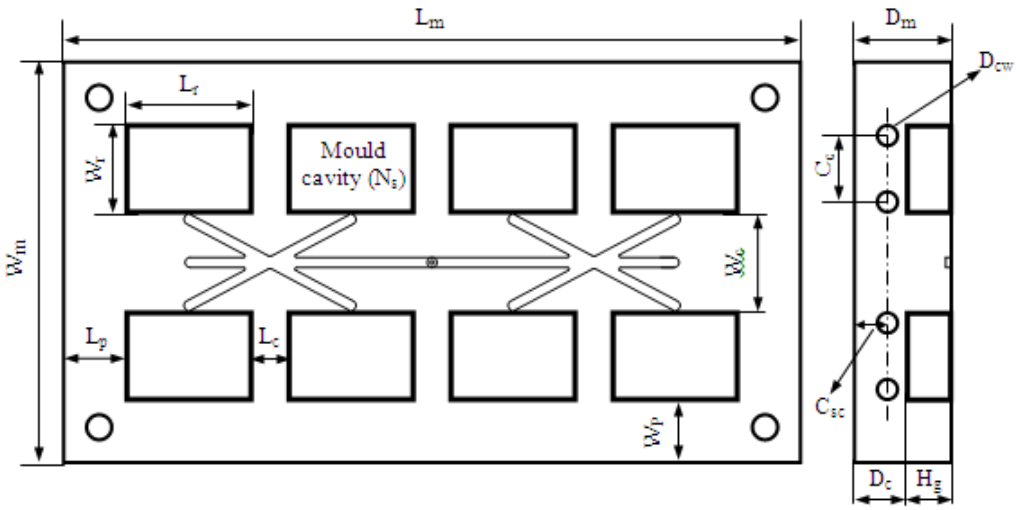

Fig.5. The pattern of die design and size (Özek and Çelik, 2009)

The mould length is calculated using the equation below.

$$L_m = [N_{sh} \cdot L_r + (N_{sh} - 1) \cdot L_c + 2 \cdot L_p] \quad (6)$$

The mould width is calculated using the equation below.

$$W_m = [N_{sv} \cdot W_r + (N_{sv} - 1) \cdot W_c + 2 \cdot W_p] \quad (7)$$

The mould depth is calculated using the equation below.

$$D_m = [H_g/2 + D_c] \quad (8)$$

The depth left under the mould cavity is calculated using the equation below.

$$D_c = 2 \cdot C_{sc} \quad (9)$$

Additionally the equalities stated below must be checked (Koçak and Abalı, 2006).

$$2D_{cw} < C_{sc} < 3D_{cw} \quad (10)$$

$$C_c < 3D_{cw} \quad (11)$$

In conclusion of the calculations carried out, the programme will provide general information such as the properties of the information chosen from the database, the number of mould cavities to be processed into the mould, the information regarding the calculated injection mould using the runner type and the optimum design, the cost analysis of the moulding parameters to be calculated, the mould, and the sample to be produced on a new page (Fig. 6).

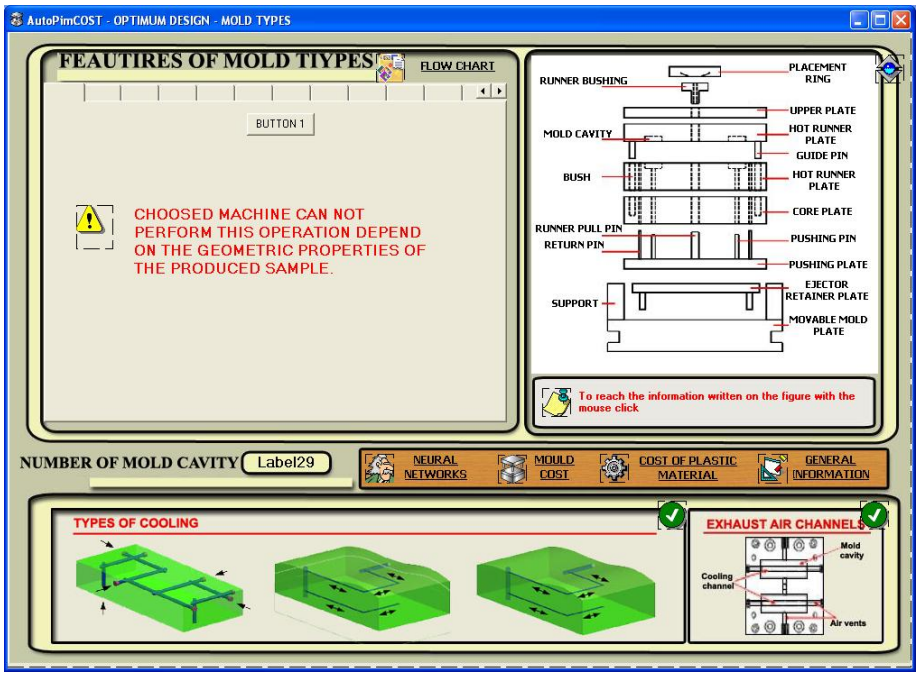

Fig.6. The data screen of optimum design

Detailed information on the chosen subject is accessible by pressing the visual commands on the data screen that shows the results of the optimum design. It is also possible to make additions in order to see the cooling system over the mould cavities and the layout of the air escape channels (Li et al.,

2005). All information regarding the injection and cooling times, the mould cost calculation, the cost of one plastic product to be produced, and the programme is accessible using the ANN.

3.2. The structure of the ANN model

An Artificial Neutral Network (ANN) has been developed for the programme in order to simplify the analysis of the parameters that affect the injection time such as the injection machine, the mould material, the plastic material, and the geometrical properties of the produced shape, and to teach the model by re-training different input and output parameters. The ANN model is comprised from an input layer, interlayer, and an output layer. There are 10 input parameters; the injection pressure, the mould temperature, the melting temperature of the plastic, the specific gravity of the plastic, the weight of the sample, the diameter of the sample, the width of the sample, the length of the sample, the thickness of the sample, and the shape of the sample. The output parameters are the injection time and the cooling time. The programme takes seven of the ten parameters from the optimum design screen, and the remaining three from the ANN screen. The programme uses the non-linear ANN model (Levenberg Marquardt). Fig. 7 illustrates the ANN screen of the programme.

1300 parameters for every element found in the entry and exit layers has been pre-defined onto the programme by taking advantage of MoldFow analyses, scientific studies carried out, and plastic elements moulded by mould companies. Outputs from the ANN were compared to real outputs, error values were determined for every input and output, and then a total error was calculated using the individual error values. 1050 weights were calculated until every single one satisfied the training condition required for every input and output. Once the weights were totally optimised, a 250-test process was started for every input and output. During the test process, the programme reaches a result by applying the weights it finds to the input parameters.

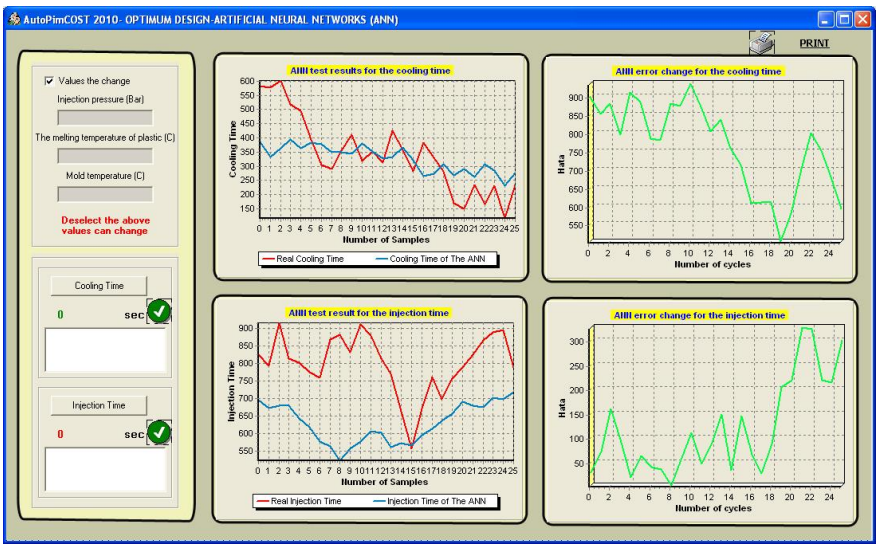

Fig.7. The screen of ANN

The ANN equations were transferred to the programme taking into account studies carried out by Şengür et al. (2005) and Suratgar et al. (2005). The network is able to be re-trained for different parameters that arise from changing the injection pressure, the melting temperature of the plastic, and

the mould temperatures on the ANN screen, and the programme has capability to re-calculate the injection time and the cooling time for these changed parameters.

3.3. Calculating of Cost

The mould cost depends on factors such as the mould material, the design, the cost of labour and workbench processing, the cost of special processing, administrative-operational and depreciation expenses, and profit.

The programme calculates the weights of the mould elements at the cost stage, in accordance with the moulding dimensions of the sample. The equations from studies conducted by Menges et al. (2001) and Kazmer (2007) are used for these calculations. In the event that a suitable mould material is chosen from the mould materials added to the database, the unit price of the chosen mould material is multiplied with the weight of the mould material to calculate the cost of the mould material (Sapane, 2007). When the number of standard mould elements (repellents, bolts, bearings, etc.), the mould design duration, the machines to be used and their process periods, the number of workers, and other expenses are input into the programme, it is possible to carry out an estimate cost calculation for the mould.

The total mould cost in the programme is calculated by using the equation below (Çelik and Özek, 2009).

$$C_{tm} = (C_d + C_{mm} + C_{mp} + C_L + C_{se} + C_{a\text{-}o} + C_D + C_p) \quad (12)$$

Fig. 8 illustrates the screen that shows the distribution of the graphics used for the mould cost calculation, while Fig. 9 illustrates the screen that shows the matrix cost. Pressing the "ADD" button automatically transfers these costs to the total cost calculation. Once the addition takes place, the "ADD" button becomes the "CHANGE" button. Fig. 10 illustrates a cost analysis screen in the program for the cost calculation of one product. Initially this screen is in passive status; initiating the mould cost and the ANN is enough to activate the status. The programme takes advantage of the mould cost and the results generated by the ANN to calculate the cost of the sample.

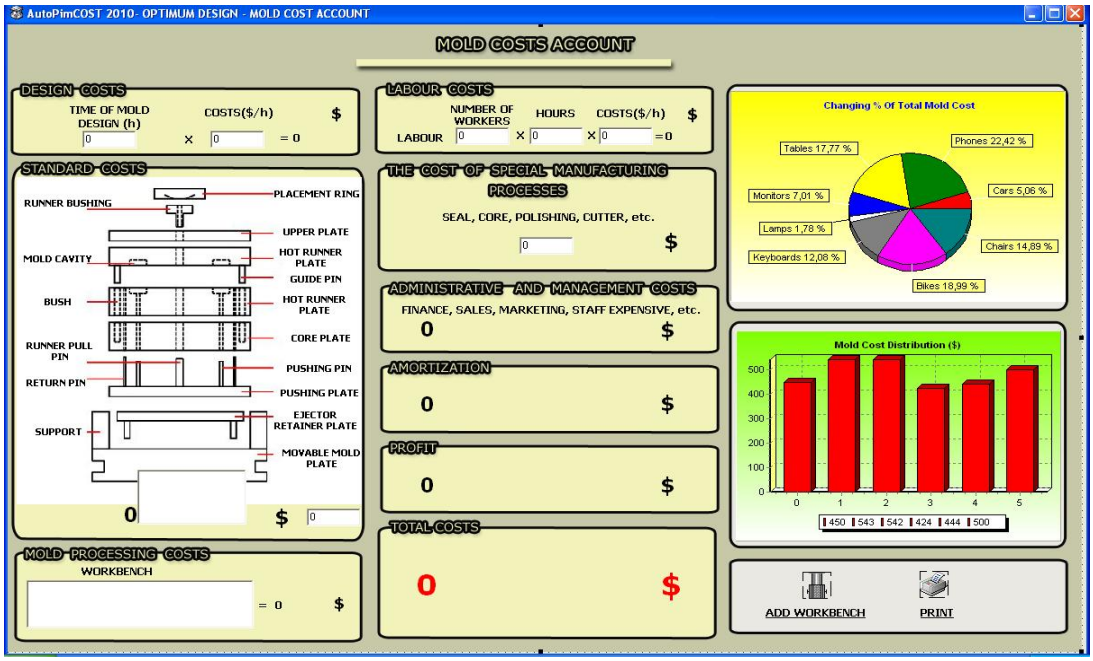

Fig.8. Screen for the cost of mold

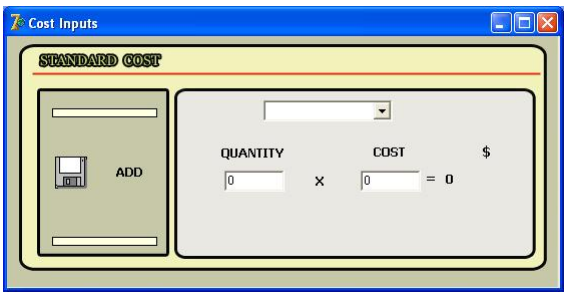

Fig.9. The cost screen of mold materials

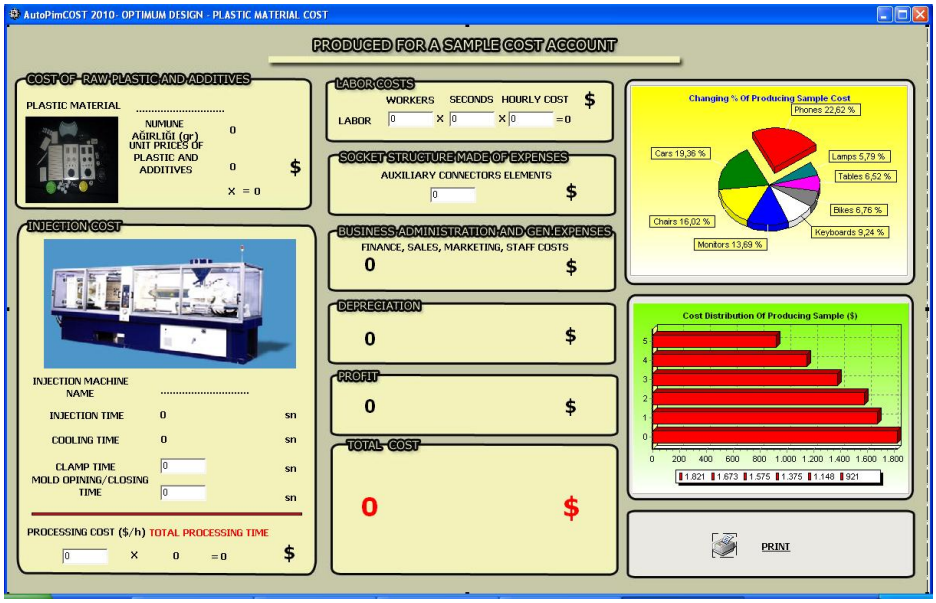

Fig.10. The cost screen of a plastic product

The total cost calculation for a sample is calculated using the equation below (Çelik et al., 2010).

$$C_{tsm} = [C_A + C_{om} + C_L + C_{se} + C_{a\text{-}o} + C_{mD} + C_p] \quad (13)$$

4. RESULTS OF SOFTWARE

The programme provides the real measurements for its pre-calculated moulding dimensions, the distance between the mould cavities, the number of mould cavities, the cooling water time, the injection time, the mould cost, the cost to produce one product, the clamp pressure, and the amount of shrinkage in the moulded product in detail (Fig. 11).

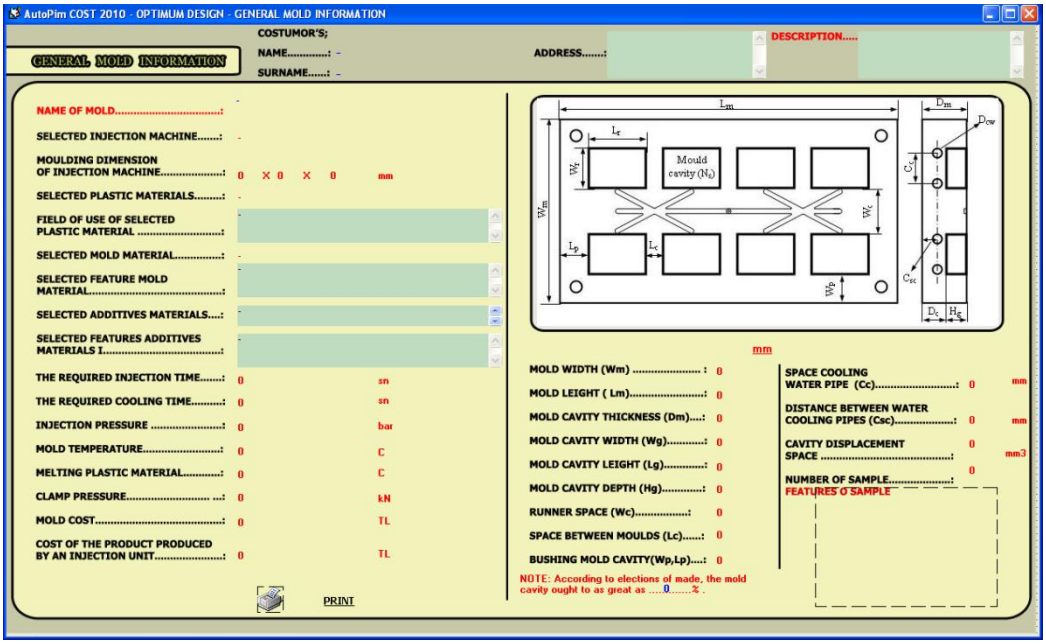

Fig.11. The screen of general information

5. EXPERIMENTAL AND SOFTWARE STUDIES

Different applications to measure the accuracy of the software were examined, and some samples are illustrated in Fig.12.

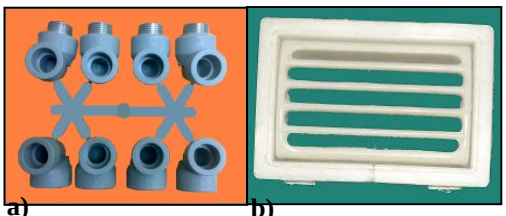

a) b)

Fig.12. Some samples that made application studies (Özek and Çelik, 2012)

The ¾ inch thread elbow application, illustrated in Fig.12.a, is commonly used for installations and the natural gas process. Clack, given in Fig.12.b, is commonly used in vehicles as the air blowing element.

As in the application of cable clamp, the sample applications, illustrated in Fig. 12, were used in experimental studies; the results obtained were investigated. Some of the data obtained from the experimental studies and the Software are illustrated in Table 1 and Table 2 Table 3.

Table 1. t_{in} and t_{co} date obtained from experimental results (ER) and Software (S) data for more case studies (Özek and Çelik, 2012)

¾ inch thread elbow application						
P_{lim}=540 bar			ER		S	
T_W (°C)	T_M (°C)	V_{in} (mm/sec)	t_{in} (sec)	t_{co} (sec)	t_{in} (sec)	t_{co} (sec)
20	210	70	5.9	13	6.17	12.98
40	210	50	6.6	14.5	6.98	14.74
60	210	30	7.2	17	7.34	16.56
Clack application						
P_{lim}=540 bar			ER		S	
T_W (°C)	T_M (°C)	V_{in} (mm/sec)	t_{in} (sec)	t_{co} (sec)	t_{in} (sec)	t_{co} (sec)
20	210	70	3.5	8.5	3.26	7.89
40	210	50	3.8	10	3.85	9.61
60	210	30	4.1	12	4.24	12.76

Table 2. VS date obtained from experimental results (ER) and Software (S) data for more case studies (Özek and Çelik, 2012)

¾ inch thread elbow application			
P_{lim}=540 bar, t_{co}=10 sec		ER	S
T_W (°C)	T_M (°C)	VS (%)	VS (%)
20	210	2.6	2.55
40	210	2.3	2.43
60	210	2.1	2.17
Clack application			
P_{lim}=540 bar, t_{co}=10 sec		ER	S
T_W (°C)	T_M (°C)	VS (%)	VS (%)
20	210	1.5	1.92
40	210	1.35	1.43
60	210	0.95	1.17

Table 3. Cost of Mold (C_{tm}) and Production (C_{tsm}) (Özek and Çelik, 2009)

¾ inch thread elbow application			
ER		S	
C_{tm}	C_{tsm}	C_{tm}	C_{tsm}
5003 $	1,2 $	5152,65 $	1,4 $
Clack application			
ER		S	
C_{tm}	C_{tsm}	C_{tm}	C_{tsm}
1200 $	0,8 $	1120 $	0,7 $

Cost of mold of ¾ inch thread elbow application are illustrated in Fig.13. Cost of total mold as illistrated Fig.13 was calculated as 5152,65 $ from software. At the experimental study; Manufacturing the mold of ¾ inch plastic thread elbow component, whose actual application has been performed, has performed with the total cost of 5003 $ including the design cost of the mold components as 410 $, the material cost of the mold components as 420 $, mold processing cost as 1680 $, labor expenses as 670 $, special expenses as 200 $, administrative and management expenses as 405 $, amortization expenses as 378 $, and the profit as 840 $ (Özek and Çelik, 2009).

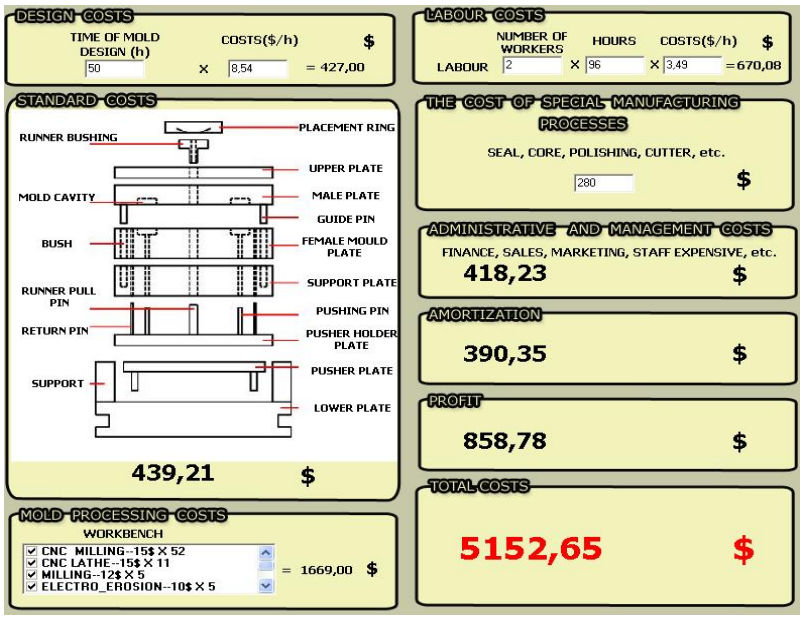

Fig.13. Cost of mold of ¾ inch thread elbow application (Özek and Çelik, 2009)

As shown in Table 1, Table 2 and Table 3, there is a parallel relationship between the Software and experimental studies. This is a very important factor for the validity of the Software.

6. RESULT AND DISCUSSION

For all of these processes the programme,

1. Analyses in detail the geometric properties of the sample to be moulded (making sure the mould cavity measurements are larger for the minimum amount of shrinkage, taking into account the shrinkage amount), the injection machine (in which the mould will be used), the plastic product's moulding number (by choosing the correct mould material and calculating the suitable cost).

2. Calculates whether or not the injection parameters are suitable by using the valid equations.

3. Offers the cooling and ventilation systems for information.

4. Calculates the cost of the mould and the moulded product.

5. Reports general results.

6. Provides results faster and more reliably as all calculated values arise numerically in a computerised environment. This ultimately means minimal time loss.

The thought is that this programme, which approaches issues regarding plastic injection moulding techniques in detail, will carry grave importance for the industry in terms of technology and economy.

Symbols

W_s : The weight of the sample (gr),

V_s : The volume of the drawn sample shape (mm^3),

ℓ_p : The density of the plastic material (gr/cm^3),

ℓ_a : The density of the additive (gr/cm^3),

S_p : The shrinkage % of the plastic material,

N_s : Mould cavity,

L_r : The real length of the piece to be processed (mm),

W_r : The real width of the piece to be processed (mm),

H_r : The real depth of the piece to be processed (mm),

L_m : The length of the mould (mm),

L_c : The distance between the horizontal mould cavities (mm),

L_p : The horizontal mould edge pin cavity (mm),

N_{sh} : The number of horizontal samples to be processed onto the mould

W_m : The width of the mould (mm),

N_{sv} : The number of vertical samples to be processed onto the mould,

W_c : The distance between the vertical mould cavities (mm),

W_p : The vertical mould edge pin cavity (mm),

D_m : The depth of the mould (mm),

D_c : The depth under the mould cavity (mm),
D_{cw} : The diameter of the cooling water channel (mm),
H_g : The height of the plastic piece (mm),
C_{sc} : The cavity between the sample and the cooling water (mm),
C_c : The space between the cooling channels (mm),
C_d : Design cost ($),
C_{mm} : Mould material cost ($),
C_{mp} : Mould processing cost ($),
C_L : Labour cost ($),
C_{se} : Special manufacturing process expenses ($),
C_{a-o} : General administrative-operational expenses ($),
C_D : Depreciation
C_p : Profit ($),
C_{tm} : Total mould cost ($),
C_{tsm} : Total cost of one sample ($),
C_A : Additive cost ($),
C_{om} : The cost of operating the machine ($),
C_{se} : Used socket expenses ($),
C_{mD} : Mould depreciation
IM : Injection machine
MM : Mould material
PM : Plastic material
P_{lim} : Limit injection pressure (bar)
A : Additive
Smm : Standard mould material
Sgp : Geometric properties of the sample
SS : Shape of the sample
t_{in} : Injection time (sec)
t_{co} : Cooling time (sec)
T_W : Mold temperature (˚C)
T_M : Melting temperature of plastic (˚C)
V_{in} : Injection velocity (mm/sec)
VS : Volumetric shrinkage (%)

REFERENCES

Bryce, DM 1996, *Plastic injection moldings, manufacturing process fundamental*, Society of Manufacturing Engineers, SME, Technology & Engineering.

Chen, ZH 2010, *PSO-based back-propagation artificial neural network for product and mold cost estimation of plastic injection molding*, Comp. & Ind. Eng. 58, 625-637.

Chen, X & Lam, YC & Li, DQ 2000, *Analysis of thermal residual stress in plastic injection molding*, J. of mater. Proc. Tech. 101, 275-280.

Çelik, YH & Özek, C 2009, *The developing of a new programme for cost in plastic injection moulds, 5th International advanced technologies symposium*; 13-15 May, Karabük-Turkey.

Çelik, YH & Özek, C & Gürgüze, G 2010, *The product cost calculation in the plastic injection moulding using Delphi programming language and developing of a new package program*, e-J. of New World Sci. Acad. 5(3), 279-287.

Ergüney, S & Karataş, Ç & Sarıtaş, S 2005. *Investigation of mouldability of commercial plastic*, Journal of Fac. Eng. Arch. Gazi Univ. 20, 297-303.

Ferreira, JC & Mateus, A 2003. *Studies of rapid soft tooling with conformal cooling channels for plastic injection moulding*, J. of mater. Proc. Tech. 142, 508-516.

Gao, Y & Wang, X 2009, *Surrogate-based process optimization for reducing warpage in injection molding*, J. of mater. Proc. Tech. 209, 1302-1309.

Karaağaç, İ & Özdemir, A 2005, *An algorithmic approach to the traditional cost calculation of the plastic injection moulds*, G.U. Journal of Science 18(4), 657-669.

Kazmer, DO 2007, *Injection mold design engineering*, HANSER Publisher, Technology & Engineering.

Koçak, M & Abalı, BA 2006, *Plastic injection mold design, Senior Design Project*, Istanbul Technical University, Faculty of Machine, Department of Mechanical Engineering.

Koyun, Ç 2005, *Computer aided design and analysis of plastic injection moulding*, Master's Theses, Yıldız Technical University, Institute of Science.

Lau, HCW & Wong, TT & Pun, KF 1999, *Neural-fuzzy modeling of plastic injection molding machine for intelligent control*, Expert system with appl. 17, 33-43.

Li, CL & Li, CG & Mok, ACK 2005, *Automatic layout design of plastic injection mould cooling system*, Computer-Aided Des. 37, 645–662.

Malloy, AR 1994, *Plastic Part Design for Injection Molding*, HANSER publications.

Menges, G & Michaeli, W & Mohren, P 2001, *How to make injection molds*. 3. Edition, HANSER Publishers.

Oktem, H & Erzurumlu, T & Uzman, I 2005, *Application of taguchi optimization technique in determining plastic injection molding process parameters for a thin-shell part*. Mater. and des. 28, 1271-1278.

Özek, C & Çelik, YH 2009, *Developing a new package program for manufacturing plastic injection moldings and cost calculation*, J. of appl. sci. res. 5(12), 2375-2382.

Özek, C & Çelik, YH 2012, *Calculating molding parameters in plastic injection molds with ANN and developing software*, Mater. and Manuf. Proc. 27, 160-168.

Sadeghi, BHM 2000, *A BP- neural network predictor model for plastic injection molding process*, J. of mater. Proc. Tech. 103, 411-416.

Sapene, C 2007, *Cost Analysis of Plastic Injection Molds. Master of Science in Engineering*, Management B.S. Mechanical Engineering.

Shelesh-Nezhand, K & Siores, E 1997. *An intelligent system for plastic injection molding process design*, J. of mater. Proc. Tech. 63, 458-462.

Suratgar, AA & Tavakoli, MB & Hoseinabadi, A 2005, *Modified Levenberg Marquardt Method For Neural Networks Training*, Proceedings of World Academy of Science, Engineering and Technology. ISSN 1307-6884.

Şengür, A & Türkoğlu, İ & İnce, MC 2005, *Image segmentation applications with unsupervised neural networks*, IEEE, SIU 16-18 May.

Uluer, O 2008, *The effect of the processing parameters on frozen layer formation in injection molding*, Journal of Fac. Eng. Arch. Gazi Univ. 23, 249-255.