Journal of International Scientific Publications:
Materials, Methods & Technologies, Volume 6, Part 2

TECHNICAL GLYCEROL - TRANSFORMATION FROM WASTE MATERIAL TO USEFUL COMPONENT

Dragomir G. Dobrudzhaliev[2], Boyan B. Ivanov[1], Boryana Kr. Dimitrova[1], Desislava St. Nikolova[1]

[1]Institute of Chemical Engineering, Bulgarian Academy of Sciences

Acad. G. Bonchev Str., Bl 103, Sofia 1113, Bulgaria

[2]Prof. Dr. Assen Zlatarov University, Bourgas

Prof. Yakimov Str 1, Bourgas 8000, Bulgaria

Abstract

One of the main tasks today in energy efficiency are full of energy recovery and development and the use of alternative energy sources. The problem with the quantities and prices of motor fuels and their ecology is the basis for much modern research.The Production and use of the biodiesel is increasingly necessary in the transport propulsion systems. In its production is very different waste products, such as the glycerol. It should not be disposed of, and look for ways to fulfill it. The purification certain levels are one approach to its preparation, as raw material in different technology productions. The increasing the amount of the spilthed glycerol in biodiesel production is focused towards the development of systems for purification and efficient technologies for its utilization.

Key words: *biodiesel, waste glycerol, recovery, purification*

1. INTRODUCTION

There are different methods for processing of the waste biomass, aimed at obtaining energy. The biomass is divided mainly into two types - primary and secondary biomass. Primary biomass includes different plant and oil crops like canola, sunflower, soybean, palm oil and others. The digestated biomass includes different waste products, for example sludge from treatment plants, waste from households, crop and animal production, such as straw, sawdust, corn and rice stalks, corn fodder and fertilizer. Processing is also solid and liquid industrial waste. Many research efforts are aimed at developing the potential role of biomass as a future source of energy, Parikka.M (2004) [1] and Yamamoto. H (2001) [2].

For utilization of the biomass are used thermo chemical, biochemical and chemical processes. Thermodynamic processing of the waste products was studied by Balat. M. (2009) [3], and A. Marcos (2010) [4], who investigated the biochemical processes in biomass. The chemical processing of the biomass is based on the extraction process, through it is done with extracting the target component using an appropriate solvent.

The waste biomass can also be used to obtain a recycled material or biofuel - biogas, biodiesel and others. The main method for biodiesel obtaining is transesterification. For the first time such a process was studied by E. Duffy and J. Patrick in 1853, initially the aim was the production of synthetic glycerol. The problem of the biodiesel production is receiving large amounts of technical glycerol with 80-86% purity. The technical glycerol comprises a number of components whose removal is necessary for its implementation in the production - for example the glycerol is used in the pharmaceutical industry with purity over 99%. Due to its hygroscopicity glycerol is used in different products in the

cosmetic industry - for example glycerin soaps contain 15-20% pure glycerol. In the tobacco industry, glycerol with a purity of 99.10% is used for humidification of tobacco. Glycerol 98% is used for the manufacture of electrical insulating varnishes. In the military industry used 98% glycerol dynamitic.

2. AIM

The purpose of this work is to look for some effective approaches about utilization of waste glycerol obtained from biodiesel production.

3. PRODUCTION OF BIODIESEL FROM WASTE PRODUCTS

Biodiesel can be produced from organic residual oils by chemical reaction with alcohol. The reaction is performed in the presence of a catalyst.

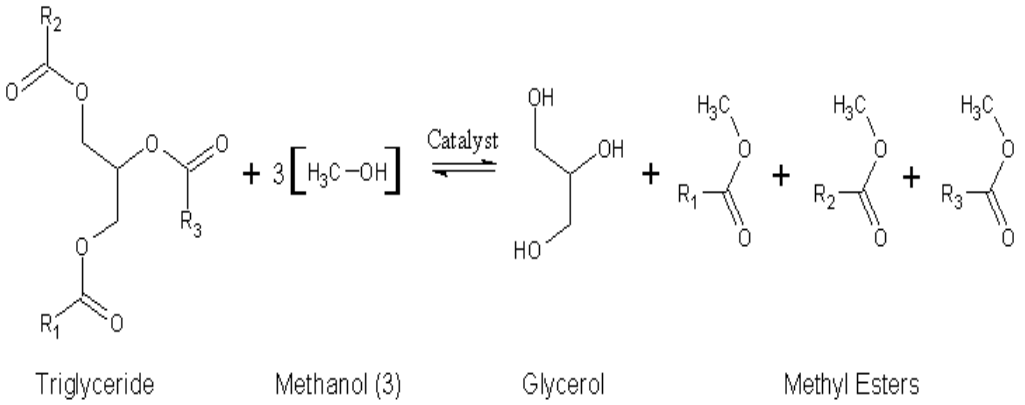

The receive is ethyl or methyl esters. The yield of alcohol esters increased with the proceeds in excess of alcohol and accelerated at elevated temperature. This process is re-esterification or transesterification of fats.

By the re-etherification is obtained glycerol. With a different additional processes that glycerol can be processed to obtain purified or distilled glycerol. The Technological scheme for processing of the waste material to biodiesel can be presented in Figure 1.

In 2006. in Bulgaria was produced over 26 tonnes of the biodiesel from second hand plant oils. One of the largest users of the biodiesel in Bulgaria is "Shvedski kibrit plam", which it used to produce environmentally friendly briquettes. Secondly comes the "Trayana Trans " Ltd., which is loaded with biodiesel freight cargo cars.

To four companies on the territory of Varna have been issued complex permits for biofuel production. These are "Class oil" in the village Karapelit Ltd, "Trade" Ltd. in Dobrich, "Slanchevi lachi Bulgaria" PLC and Provadia "Sanflauars Gold" Ltd. in Devnya.

"Astra Bioplant " Ltd. started the development of the project in this area in 2007. The company has built a modern factory in Rousse for biodiesel with 60 000 tonnes, which began operation in 2009 05.08.2011. "Astra Bioplant" Ltd receives a certificate ISCC System by SGS Germany, which shall

certify for biodiesel and oil. ISCC is the first certification system that can be used to demonstrate the sustainability and GHG emissions savings for all types of biomass and bioenergy.

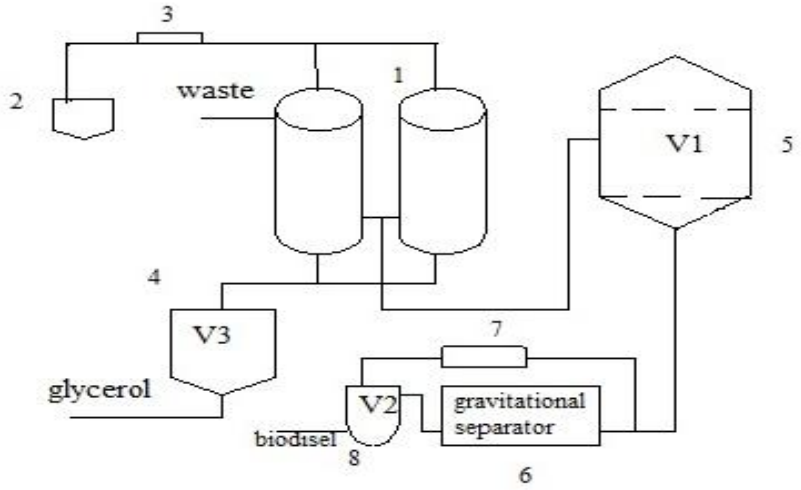

Fig.1. Technological scheme of the biodiesel production

1. Two reactor for carrying out the esterification process
2. Device for heating a catalyst methyl
3. Heat exchanger for partial raw heating
4. Buffer tank for the collection of compartments glycerol
5. Column for washing the biodiesel
6. Separator for separating wax fraction
7. Heat exchanger for cooling the biodiesel
8. Buffer tank for the collection of the biodiesel

4. PURIFICATION OF WASTE GLYCEROL

All waste products of the biodiesel production are separated into one phase. This phase is called "gluconic" and that's the other name for the waste glycerol. It contains 50% glycerol, 15-20% methanol, 8-10% water, soap 4-7%, 1-3% potassium or sodium hydroxide, 10-15% oil, biodiesel, fatty acids and 2% other ingredients.

The main problem is the difficult purification of waste glycerol, which is associated with an investment of many resources and expensive equipment. This can lead to the disposal of glycerol, which is not desirable and environmentally friendly.

One of the easiest ways to remove methanol from glycolic phase is the destillation. In order to use it we'll need simple equipment. Methanol is toxic and harmful to the users. Elimination was performed by glycerol heating over the methanol boiling point. The process is carrying out several hours, the

excess component is removed. The process is performed in well-ventilated room in full compliance with the safety regulations. The eliminated methanol is condensed and stored in containers.

On Fig.2 is presented the Model Scheme for the glycerol purification. It includes: a filter; vessels for acid and base-2, 3 static mixer-4; pump-5;-6 reactor, capacitors methanol-7, 8, capacitors for water-9, 10; vacuum station-11.

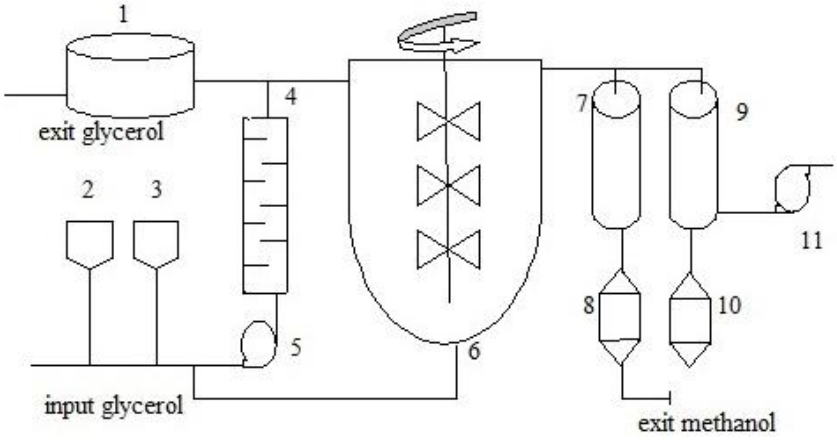

Fig. 2 Scheme of the installation for the crude glycerol purification

To remove the soap and foundations of glycolic phase it is treated with sulfuric acid. The isolation of the glycerol (90%) occurs after the realization of the following processes: heating of raw glycerol, methanol distillation, decomposition of the soaps, separation of the biodiesel and fatty acids, neutralization, filtration and concentration of the glycerol. Purification of the glycerol is economically viable only at industrial scale.

5. CALCULATION OF COSTS AND BENEGITS FROM THE GLYCEROL PURIFICATION

Including installation for glycerol purification in biodiesel production requires the reporting of many factors. It is necessary to determine the cost of transport and waste, the market price of glycerol and the market price of diesel fuel. The calculation of benefits glycerol purification from plant in biodiesel can be made using the following equation.

$$P = P_B + P_W + P_{Gl} \quad (1)$$

Where:

P - the overall benefit of the production;

P_B - benefits of biodiesel production;

P_{Gl} - benefit from the glycerol purification ;

P_W - benefit from the treatment of the waste water.

The overall benefit is calculated at some point of time [t] of the production process. This can be useful after the first year of construction of the plant.

The benefit from the work of the enterprise for a certain period of time:

$$P_{(P_0 \ldots P_n)} = \sum_{t=0}^{n} \frac{P}{(1+r)^t} \quad (2)$$

Where:

P_0 - benefit at the beginning of the operation ;

P_n - benefit at the end of nth year;

P - a common benefit in operation;

r - percentage error;

t - final period, on which the benefit is calculated.

The Consumption in implementing glycerol purification plant will be:

$$R = R_B + R_W + R_{Gl} \quad (3)$$

Where:

R - total consumption at some time in production;

R_B - consumption of the biodiesel;

R_{Gl} .- consumption of glycerol purification;

R_W - consumption of the waste water treatment.

Consumption is determined by the equation:

$$R_{(R_0 \ldots R_n)} = \sum_{t=0}^{n} \frac{R}{(1+r)^t} \quad (4)$$

R_o - consumption at the beginning of the operation;

R_n - consumption at the end of nth year;

R - total operating consumption.

The calculations are for operation of the enterprise for a certain period of its operation (three, five, ten years). On the basis these alleged results may decide whether installation of glycerol purification plant in biodiesel production is economically viable.

The process of glycerol purification plant is economically viable and its incorporating into the production process is appropriate if the revenues for the operation of the system as total are less than the cost.

6. APPLICATION OF PURIFIED GLYCEROL IN THE INDUSTRY

The application of purified glycerol is presented in Figure 3, unlike that of obtained from biodiesel production. The possible applications of glycolic raw phase are limited. The mixture can be burned in an incinerator to be used for production of fertilizers or chemicals or to be included in animal feed. Due to the presence of the traces of methanol in glycolic phase, the last two applications no longer apply. The study of economically beneficial uses of technical glycerol is expected in the near future to become even more important as the increase in biofuel production is inevitably associated with increased formation of glycerol.

On Figure 3 are shown the application areas of already purified glycerol.

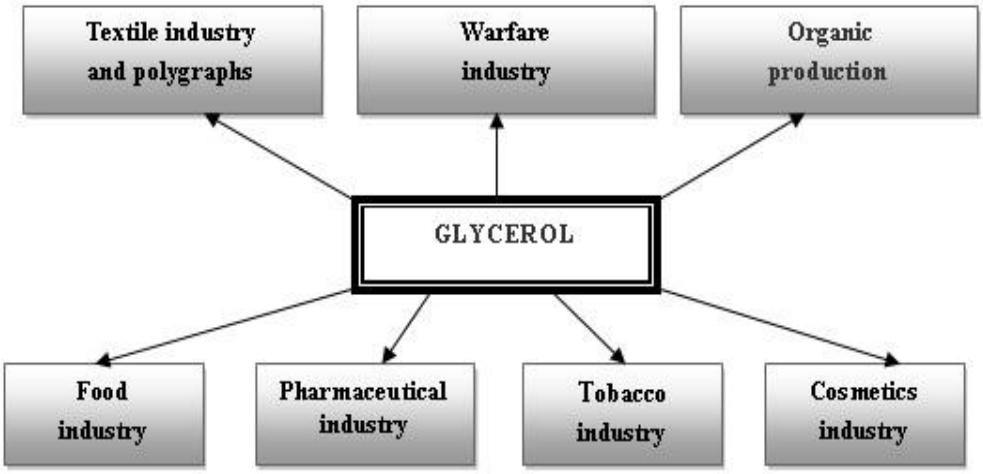

Fig. 3 Application areas of already purified glycerol

One of the most - suitable methods for recovery of the crude glycerol is its combustion to the purpose of obtaining steam and hot water. It burns only when there is created torch by natural gas or diesel. It is necessary to maintain a high temperature above 1000 ° C. Aside dioxins and white soot.

7. CONCLUSION

Technical glycerol is a waste product of biodiesel production. After purification it can be used as raw material in different industries. Most - appropriate is the purification and its integration into a technological scheme with minimum cost and maximum profit. Different technologies for its purification and full utilization are developed. It is proposed methods to be economically feasible.

ACKNOWLEDGEMENTS:

This study has been carried out with the financial support of National Science Fund, grant scheme *№DMU03/104/13.12.2011*.

REFERENCES

1. Parikka. M., (2004). Global biomass fuel resources. Biomass Bioenergy 27 (6) Pp.613-620.

2. Yamamoto. H., Fujino. J., Yamaji. K., (2001). Evaluation of bioenergy potential with a multi-regional global-land-use-and-energy model. Biomass Bioenergy 21 (3), Pp.185-203

3. Balat, M., Kýrtay, E., Balat, H., (2009). Main routes for the thermo-conversion of biomass into fuels and chemicals. Part 1: pyrolysis systems. Energy Convers. Manage. 50, Pp.3147–3157.

4. A.Marcos, A. Al-Kassir, A.A. Mohamad, F. Cuadros, F. López-Rodríguez (2010) Combustible gas production (methane) and biodegradation of solid and liquid mixtures of meat industry wastes, Applied Energy, Volume 87, Issue 5, May 2010, Pp. 1729-1735

5. Sylvain Leduc, Karthikeyan Natarajan, Erik Dotzauer, Ian McCallum, Michael Obersteiner, (2009) Optimizing biodiesel production in India, Applied Energy 86 (2009) S125–S131.

6. Hirotsugu Kamahara, Udin Hasanudin, Anugerah Widiyanto, Ryuichi Tachibana, Yoichi Atsuta, Naohiro Goto, Hiroyuki Daimon, Koichi Fujie, (2010) Improvement potential for net energy balance of biodiesel derived from palm oil: A case study from Indonesian practice, Biomass and energy, 1-7.

7. Kaldellis JK, Kavadias KA, (2007) Cost-benefit analysis of remote hybrid wind-diesel power stations: case study Aegean Sea islands. Energy Policy;35:1525- 38.

8. Recep A, SelimÇ., Hüseyin SY, (2001) The potential of using vegetable oil fuels as fuel for diesel engines. Energy Convers Manage;42:529-38.

9. Johnson DT, Taconi KA, (2007) The glycerin glut: options for the value-added conversion of crude glycerol resulting from biodiesel production. Environ Prog;26(4):338-48.

10. Zhang Y, Dubé MA, McLean DD, Kates M, (2003) Biodiesel production from waste cooking oil: 2. Economic assessment and sensitivity analysis. Bioresour Technol;90(3):229-40.

11. Nelson LA, Foglia TA, Marmer WN, (1996) Lipase-catalyzed production of biodiesel. J Am Oil Chem Soc;73(8):1191-5.

12. Von Wedel R, (1999)Technical handbook for marine biodiesel in recreational boats. Prepared for the National Renewable Energy Laboratory, US Department of Energy, Subcontract No. ACG-7-16688-01 under Prime Contract No. DE-AC36- 83CH10093. Renewable Energy Laboratory, US Department of Energy; 1-32.

13. Rihui L, Hongjuan L, Jian H, Keke C, Dehua L, (2005)Enhancement of 1,3-propanediol production by Klebsiella pneumoniae with fumarate addition. Biotechnol Lett; 27:1755-9.