Journal of International Scientific Publications:
Materials, Methods & Technologies, Volume 5, Part 1
ISSN 1313-2539, Published at: http://www.science-journals.eu

SUPERCRITICAL EXTRACTION OF LEMON BALM WITH CARBON DIOXIDE: INFLUENCE OF ETHANOL ADDED AS MODIFIER

George Angelov[1], Petko Penchev[1], Jean-Stephane Condoret[2]
[1]Institute of Chemical Engineering, Bulgarian Academy of Sciences,
Acad. Bonchev St., Block 103, 1113 Sofia, Bulgaria
[2]Laboratoire de Génie Chimique, CNRS UMR 5503,
4 alée Emile Monso, 31030 Toulouse, France

Abstract

The extraction with supercritical fluids is an environmentally clean technology for producing ingredients for pharmacological, cosmetics, and food applications. Among the different natural compounds with bioactive properties, antioxidants are being intensively studied. The important role of antioxidants for human health being well known, an increased interest and demand of such products by the consumers is observed. The most commonly used supercritical fluid is carbon dioxide. However, because of its low polarity, it is less effective as a solvent for extraction of polar compounds. To overcome this shortcoming, polar modifiers (co-solvents) might be mixed with the solvent.

This study investigates the influence of a polar compound ethanol, added as a modifier to the basic solvent CO2. The system under study is extraction of rosmarinic acid (RA), a polar substance with strong antioxidant capacity, from the plant Lemon balm (Melissa Officinalis L.). The results obtained show that the quantity of RA extracted from a unity of raw material with co-solvent ethanol is at least five times greater than in case of use of CO2 only. The concentration of rosmarinic acid in the extracts is also about five times higher. The general conclusion is that the polar co-solvent ethanol, by inducing some polarity to the supercritical solvent, boosts significantly its extraction capacity with respect to compounds having polar molecular structure.

Key words: *solvent extraction, antioxidants, rosmarinic acid, Lemon balm, supercritical carbon dioxide, modifiers, co-solvents, ethanol*

1. INTRODUCTION

As far as real or potential harmfulness of synthetic substances on human organism has been reported, consumer preferences are targeted towards substances of natural origin (i.e. of non synthetic origin) being commonly extracted from natural sources of vegetal type, such as plants. Botanical extracts are traditionally produced by solid-liquid extraction with organic solvents [1,2]. This conventional extraction technique has some substantial drawbacks as low selectivity and use of large amounts of toxic solvents. At present, a new and promising extraction method is being applied, using supercritical fluids as solvents [3-5]. Compared to liquid solvents, they have lower viscosity and higher diffusivity than liquids, and for this reason their transport properties are better. They can diffuse easier inside the plant structure providing better contact and better yield. Their density is sensible to pressure and temperature changes and can be easily modified by applying appropriate operational conditions. The density is directly related to solubility and selectivity, so they can be tuned simply by controlling the pressure and temperature.

The most commonly used fluid for supercritical extraction is carbon dioxide. It goes into supercritical state at relatively moderate pressure and temperature (73 bar and 31.3°C). At atmospheric pressure it is a gas, after decompression it evaporates spontaneously and fully from the extract, and the latter is obtained free of solvent. So, this extraction technique, besides its higher selectivity, does not use toxic organic solvents and produces extracts entirely free of solvent. The technology is environmentally clean and very appropriate for production of ingredients for pharmacological, cosmetics, and food applications.

Antioxidants are among the most intensively studied compounds with functional bioactive properties [6-8]. The important beneficial role of antioxidants for human health is well known [9]. They neutralize the free radicals, which cause negative interactions with DNA, pathological changes (atherosclerosis, allergies), development of abnormal cells (cancer), premature ageing, etc. Antioxidants are also often used as preservatives in cosmetics and food industry for increasing storage life of products, because they hamper the processes of lipid oxidation, which is the main reason for development of bad odors and rancid taste [10,11]. In view of their beneficial properties, strong interest in such products exists, and increased demand by the consumers is observed.

The aim of this work is to examine the supercritical extraction of a substance with antioxidant properties, rosmarinic acid (RA), existing in a number of plants from the family laminaceae. Among them, Lemon balm has been found to be one of the richest with respect to RA content [12,13]. For this reason we have chosen Lemon balm as a raw material for recovery of RA by supercritical extraction.

2. MATERIALS AND METHODS

Lemon balm is a perennial plant with mint odor. It originates from southern Europe and Mediterranean region, and is widely distributed all over the world. In this study dry leaves and stems have been ground and classified by sieving to separate a fraction with mean size 0.94 mm (0.63 – 1,25 mm).

Rosmarinic acid ($C_{18}H_{16}O_8$) is a polar compound better soluble in polar solvents [14]. Unlikely, the common supercritical fluid – carbon dioxide, has a symmetrical low polar molecule. For this reason it might demonstrate lower extraction capacity when dealing with polar compounds. In the case of treatment of Lemon balm with supercritical CO_2, relatively low extraction degree of RA has been observed [15]. To overcome this shortcoming, modifiers (also called co-solvents) are commonly used. The modifiers are highly polar compounds usually added in small amounts to the supercritical carbon dioxide with the aim to change the total polarity of the solvent. The result might be substantial power and capacity changes of this mixed solvent. In our study we have examined as modifiers two polar compounds, ethanol and water, because they are harmless in view of use in consumer products.

The analyses of RA are made by High Performance Liquid Chromatography (HPLC) with a measuring system including:

- pump Spectra System p1000XR;
- column Discovery C18 (25 cm x 4.6 mm, 5 μ), Supelco;
- chromatograph Spectra system;
- detector UV 2000.

The carrier phase is a mixture of methanol : water (80:20 v/v) fed with flowrate 0.4 ml/min. RA is registered at wave length 280 nm. The calibrating curve is made with RA p.a. (Fluka) in the concentration range 0.002 – 0.045 g/L.

3. EXPERIMENTAL INSTALLATION AND PROCESSING

A scheme of the experimental installation (Separex 3417, type SF200) is shown in Fig. 1.

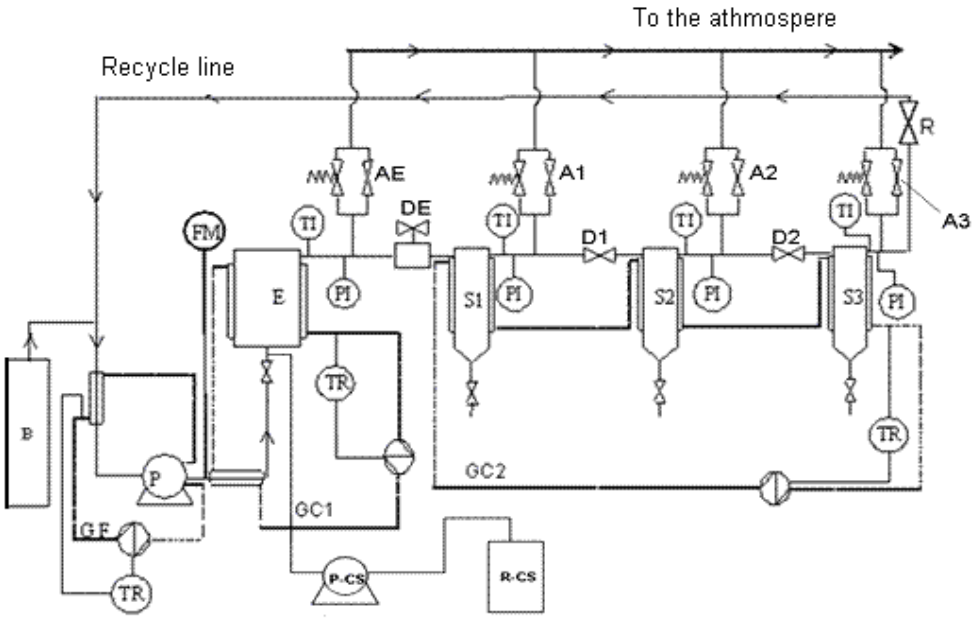

Fig. 1. Installation scheme

The installation contains a 200 ml extractor E and three separators S1-S3 connected in series. A control system keeps constant pressure and temperature and monitors their values in the vessels E and S. The plant material is put into the extractor E. Carbon dioxide is fed by a pressurized bottle B. It is liquefied and brought to supercritical state by a high-pressure pump P and heat exchanger GF. The co-solvent is introduced by a tank R-CS through the pump P-CS and is mixed in the basic fluid just before the extractor entrance. The mixture CO_2 – co-solvent flows through the extractor from bottom to top direction. The extract is collected in the separators, weighted and analyzed.

4. RESULTS AND DISCUSSION

The experimental runs supply information for evaluation of a number of parameters used to quantify the results:

- Total yield of supercritical extract

$$Y_{ex}[\%] = \frac{m_{ex}}{m_{rm}}.100 \qquad (1)$$

- Rosmarinic acid yield

$$Y_{RA}[\%] = \frac{m_{RA}}{m_{rm}}.100 \quad (2)$$

- Concentration of rosmarinic acid in the extract

$$C_{RA}[\%] = \frac{m_{RA}}{m_{ex}}.100 \quad (3)$$

with m_{ex} – mass of extract obtained; m_{rm} – initial mass of the plant raw material charged in the extractor; m_{RA} – mass of rosmarinic acid.

Also, the relative values of the terms defined in Eq. (1-3) are calculated as a ratio of values obtained for different regimes with co-solvent and without co-solvent. They show how many times the extraction with co-solvent ameliorates the

All experimental runs are made at temperature 40°C and pressure 120 bar. These values are chosen to be not very far from the critical parameters of carbon dioxide (31.3°C and 73 bar).

Fig. 2 shows the influence of co-solvent quantity added to CO_2 on the total yield Y_{ex} (Eq. 1) – left ordinate, and on the relative total yield – right ordinate. It is seen that the total yield is significantly better when using co-solvent and increases at higher co-solvent proportion. The relative yield with co-solvent is 7.5 – 12 times higher. This is a testimony for a significant modification of the solvating power of CO_2 towards compounds with polar structure due to the added polar substance ethanol.

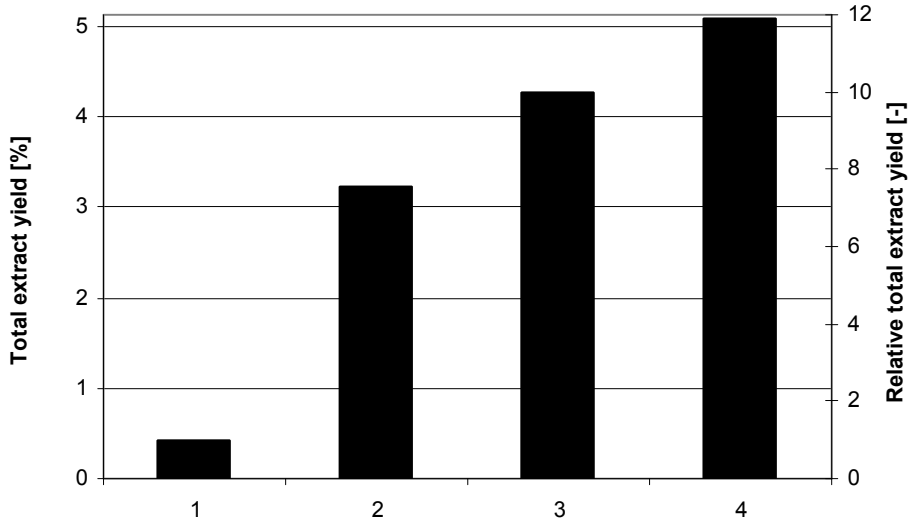

Fig. 2. Total extract yield at different percentage of ethanol in the solvent.

CO_2 flowrate = 6.4 g/min, extraction time 4 hours.

1 – without co-solvent; 2 – 5 % co-solvent, 3 – 10 % co-solvent; 4 – 15 % co-solvent

Fig. 3 shows the relative yield of RA at different conditions.

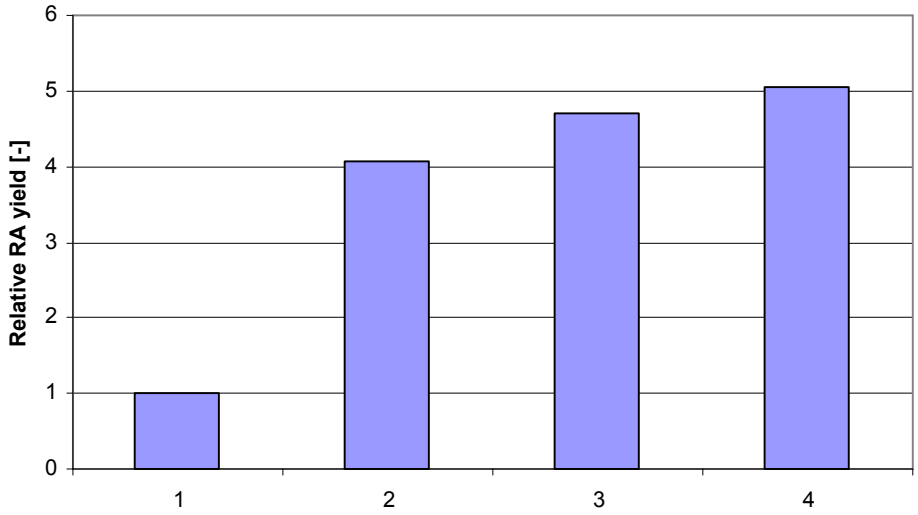

Fig. 3. Relative yield of rosmarinic acid at different percentage of co-solvent.
CO_2 flowrate = 6.4 g/min.
1 – without co-solvent, extraction time 15 hours; 2 – 5 % co-solvent, extraction time 4 hours;
3 – 10 % co-solvent, extraction time 4 hours; 4 – 15 % co-solvent, extraction time 4 hours

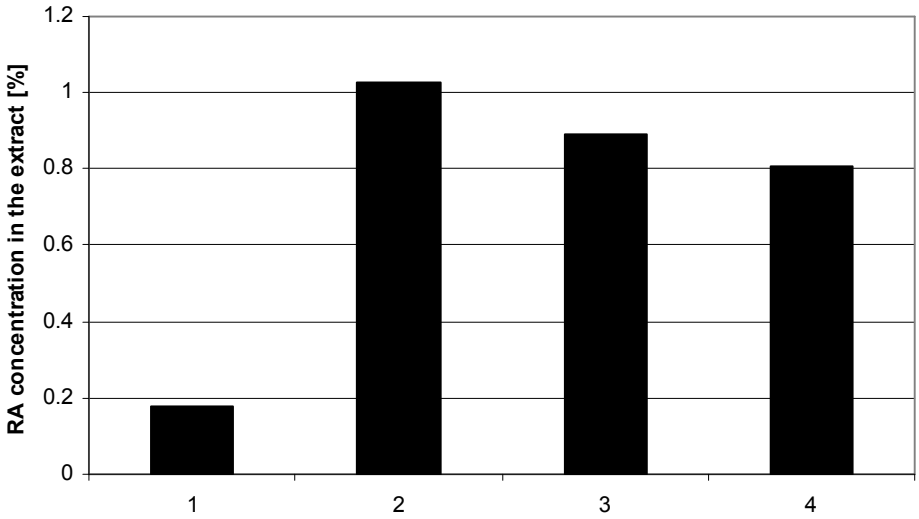

Fig. 4. Rosmarinic acid concentration in the extract as a function of the proportion of co-solvent.
CO2 flowrate = 6.4 g/min.
1 – without co-solvent, extraction time 15 hours; 2 – 5 % co-solvent, extraction time 4 hours;
3 – 10 % co-solvent, extraction time 4 hours; 4 – 15 % co-solvent, extraction time 4 hours

The quantity of RA extracted with CO_2 only is 4-5 times lower than in case of its mixture with ethanol, although the extraction time is 4 times longer. Rosmarinic acid yield grows when increase co-solvent proportion. As above, the explanation is to be found in the fact that more ethanol induces more polarity to the basic solvent thus increasing its capacity to dissolve RA.

The use of ethanol changes not only the quantity of the extract, but also its composition with regard of RA as a target component. Fig. 4 shows RA content in the extract (C_{RA} – Eq. 3) in cases without and with co-solvent. The observation here is that RA concentration becomes lower when increase the co-solvent amount although, according to Fig. 3, more RA is extracted. It means that other polar compounds become more soluble in the presence of ethanol, and their preferential extraction takes place producing more quantity of total extract. As a result, the concentration of RA in the total extract becomes lesser.

5. CONCLUSION

The process of supercritical extraction of rosmarinic acid from lemon balm is studied. Two cases are compared – extraction with carbon dioxide only and extraction with mixtures of carbon dioxide with co-solvent ethanol.

The results show that the total extracted amount is 7 – 12 times higher in case of use of co-solvent. The higher the co-solvent proportion, the higher the amount of total extract.

The quantity of RA extracted with co-solvent from a unity of raw material is at least five times greater than in case of use of carbon dioxide only.

The concentration of rosmarinic acid in the extracts is also about five times higher. However, it shows a tendency to decrease at higher proportions of co-solvent because of increased solubility in ethanol of other “ballast” polar compounds.

The general conclusion is that the polar co-solvent ethanol, by inducing some polarity to the supercritical solvent, boosts significantly its extraction capacity with respect to compounds having polar molecular structure.

ACKNOWLEDGMENT

The authors are thankful for the financial support to the international cooperation project PICS (partners Bulgarian Academy of Sciences and Centre National de Recherche Scientifique (CNRS) – France) and Bulgarian Fund for Scientific Research (project X 1501).

REFERENCES

1. Lo T.C., Baird M.H.I, Hanson C. (1983) Handbook of solvent extraction, Wiley, New York.
2. Kirk-Othmer’s encyclopedia of chemical technology (2007) John Wiley&Sons, New York.
3. Clifford T. (1989) Fundamentals of supercritical fluids, Oxford University Press, New York.
4. King J.W. (2000) Advances in critical fluid technology for food processing, Food Sci. & Technol. Today. 14, 186-191.
5. Wang L., Waller, C. L. (2006) Recent advances in extraction of nutraceuticals from plants, Trends in Food Sci. and Technol., 17, 300-312.

ISSN 1313-2539, Published at: http://www.science-journals.eu

6. Wang M., Li J., Rangarajan M., Shao Y., Lavoie E. ., Huang T. C., Ho C. T. (1998) Antioxidative phenolic compounds from Sage (Salvia officinalis), J. Agric. Food Chem., 46, 4869-4873
7. Piñero-Estrada, J. E., Bermejo Bascós, P., Villar del Fresno, A. M. (2001) Antioxidant activity of different fractions of Spirulina platensis protean extract, Il Farmaco, 56, 497-500.
8. Ivanova D., Gerova D., Chervenkov T., Yankova T. (2005) Phenols and antioxidant activity of Bulgarian medicinal plants, Journal of Ethnopharmacology, 96 145-150.
9. Borowitzka, M. A., Borowitzka, L. J. (1988) Micro-algal biotechnology, Cambridge University Press. Cambridge (UK). pp. 96-100.
10. Yanishlieva N., Marinova E. (1995) Antioxidant activity of selected species of the family Laminacea grown in Bulgaria, Die Nahrung, 39, 5/6, 458-463.
11. Ribeiro M. A., Bernardo-Gil M. G., Esquivel M. M. (2001) Melissa officinalis L.: Study of antioxidant activity in supercritical residues, J. Supercritical fluids, 21, 51-60.
12. Lamaison J. L., Petitjean-Freitet C., Carnat A. (1991) Medicinal Laminaceae with antioxidant properties, a potential source of rosmarinic acid, Pharm. Acta Helv., 66, (7), 185-188.
13. Zgorka G., Glowniak K. (2001) Variation of free phenolic acids I medicinal plants belonging to the Laminaceae family, J., Pharm. Biomedical Analyses, 26, 79-87.
14. Petersen M., Simmounds M. S. J. (2003) Rosmarinic acid, Phytochemistry, 62, 121-125 (2003).
15. Penchev P. (2010) Ph. D. Thesis, University of Toulouse, France.