THE PROCESSES OF HEAT AND HUMIDITY EXCHANGE IN THERMO-INSULATING MATERIALS

Judita Cas-Krneza, Danijela Dobersek, Darko Goricanec
University of Maribor, Faculty of Chemistry and Chemical Engineering
Smetanova 17, 2000 Maribor, SLOVENIA

Abstract

The processes of simultaneous heat and humidity expansion demand a very detailed analytical description of the mechanism of heat transmission. For this purpose the kinetics of heat and humidity content exchange and the dependence of thermal conductivity on humidity content will be researched. In addition, the intensity of heat and humidity transmission through insulating material depending on its structure, form, dimension and porosity, will be analysed.

Key words: *Thermo – insulating materials, Heat transmission, Model for testing moisture conductivity, Humidity, Heat conduction*

1. INTRODUCTION

The efficiency growth in the technological machinery applying the heat in extreme temperature conditions, dictates a correct selection of insulating materials and their exploitation. Intensive processes in the heat and humidity exchange occurring in the insulation, have a great impact on the features and life of insulation, which greatly depend on a phase transition of humidity into the capillary-porous structure of the insulation (Pfundstein, 2008). That is why the processes of concurrent heat and humidity expansion require the best possible precise analytical description of the heat transmission mechanism.

2. CAPILLARY-POROUS STRUCTURE AND HUMIDITY CONTENT

In the analysis of heat-transmission processes through the capillary porous materials, diverse models of porous structures are applied (Smirnov, 2010):

- Cylindrical capillaries not being intersected,
- Parallel plates,
- Densely spread areas of equal diameter,
- Densely arranged cylindrical cores of equal dimensions,
- Cylindrical cores, which are intersected,
- Capillaries of equal diameter, which are intersected.

According to A.V. Likov (Lykov, 1978) the humid materials can be classified into three groups:

- Colloidal materials (elastic gels, considerably changing their dimension during the drying or humidifying procedure, though retaining their elastic properties),

- Capillary-porous materials (retain their dimensions during the drying process, though they become rigid),
- Capillary-colloidal materials (have properties of both the above mentioned materials).

The following forms of bonded humidity are distinguished:

- Chemically bonded humidity, (humidity mass is defined with stechiometric ratios and is in the form of hydroxidic ions and molecular units);
- Physical-chemically bonded humidity (contains adsorptively and osmotically bonded humidity. Adsorptively bonded humidity in colloidal bodies occurs in the first phase of water absorption and represents a layer of water molecules, and the osmotically bonded humidity occurs in the second phase of humidity absorption. The process runs without any contraction or heat emission. The mass of osmotically bonded humidity is considerably bigger than that of adsorptively bonded humidity);
- Physical-mechanically bonded humidity, (contains a leavening humidity – a surface absorbed humidity in direct humidity contact with the surface of a body, a structural humidity – the bonded humidity in creating the body structure, and capillary humidity, found in capillaries).

3. HEAT TRANSMISSION PRINCIPLES

3.1. General Principles of Heat Transmission

The intensity of heat and humidity transmission through the insulation material depends on the structure, shape, dimensions and arrangement of pores and capillaries, and in minor degree on the chemical composition and physical properties of the material.

In macroscopic systems the heat transmission depends on different concentrations in different points of the system, and can be developed through the molecular or molar way. In the first case, equalizing of heat occurs in the mixing process of molecules due to their chaotic movement, while in the second case, through a visible mixing of moles in the substance.

Basic axioms of the theory on the potential of thermodynamic system according to Likov (Lykov, 2010) are the following:

- In the state of thermodynamic equilibrium the heat potentials transmitted in different sections are the same.
- The heat transmission progresses from a bigger potential to the minor one.
- The heat transmission progresses in all directions, the most intensively on the isopotential surface.
- The gradient of the potential is a vector, along which there is the biggest value of the potential; the absolute value is equivalent to the first differential according to the normal of the isopotential surface.
- The density of thermal flux is the vector, the direction of which is the same as the direction of heat transmission.
- The heat transmission intensity is proportional to the gradient of potential.

3.2 Thermal Conductivity

In relation to materials the two types of thermal conductivity are known: the electronic and the photonic conductivity. The electronic conductivity is prevailing in good conductors and refers to the diffusion of free electrons, while the photonic conductivity refers to the transmission mechanism of intensive atom oscillations around the equilibrium in crystal lattices of the material. The thermal conductivity is defined by Fourier's law (Tritt, 2004).

$$\lambda = - q/gradt \qquad (W/mK) \qquad (3.1)$$

Where:

q… is a flux density of heat

grad dt… is a gradient of the heat transmission potential

The essential impact on the heat transmission has the following: density, chemical composition and material structure, temperature, humidity, shape and dimension of pores.

The density depends on the material and fluid, filling up the pores. By increased porosity the density is reduced, and the thermal conductivity in '*lines*' obtains the thermal conductivity of gas, filling the pores. Owing to enlarged dimensions of pores also the thermal conductivity is increased due to the occurrence of natural convection and radiation inside the pores. Configuration and dimensions of pores largely influence on the thermal conductivity, especially from the view of natural convection. The largest possible number of smaller closed pores is recommended, to reduce a radiation and the coefficient of water steam diffusion in the material. The structure of insulating material may have a greater impact on the thermal conductivity than a chemical composition. The most appropriate structure is that with pores closed.

Thermal conductivity changes with temperature linearly according to the experimental equation:

$$\lambda = \lambda_0 (1 + bt) \qquad (3.2)$$

Where:

λ_0 - is the temperature conductivity at 0ºC, (W/mK)

b - is experimentally defined constant,

t - is the temperature of material (ºC).

3.3 Effective Thermal Conductivity

The thermal conduction through the material is an equilibration process, comprising the following:

- Conduction through the material wrap,
- Conduction and convection through gas in pores and capillaries,
- Radiation among the walls of pores and capillaries.

Effective thermal conductivity is a composite function, not depending only on the potential of expanding, but also on the pressure and thermal conductivity of gas in pores and capillaries, on the degree of surface strength in pores and capillaries, etc.

Theoretically treated, the changeover and radiation factors are disregarded, only the conduction is considered. O. Krušer (Krischer, 1963) studied a model of capillary-porous structure of the material, consisting of successive flat and equally thick layers with thermal conductivity $\lambda_{SK,}$ and the gas with thermal conductivity λg – Fig. 1.

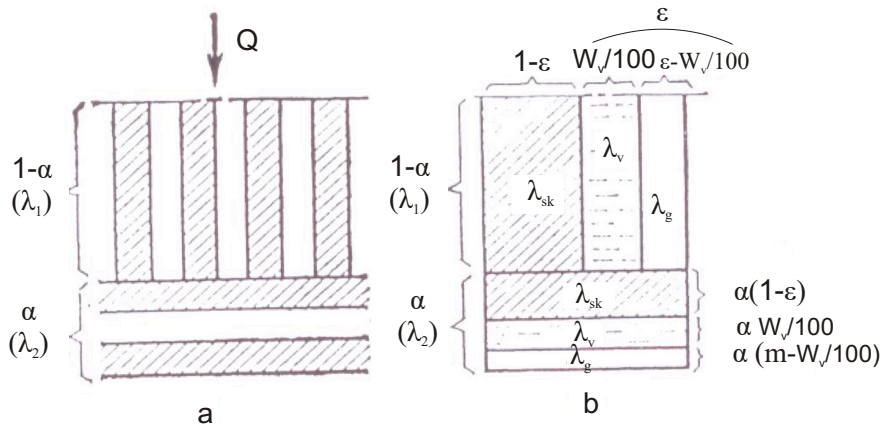

Fig. 1 The model for the analysis of heat transmission (a – in dry material, b- in wet material) (Krischer, 1963)

Arranging the layers parallel to the thermal flux, the maximum heat conductivity obtained is the following:

$$\lambda_1{}^s = (1 - \varepsilon)\,\lambda_{SK} + \varepsilon\,\lambda_g \qquad (3.3)$$

Where:

ε – is the porosity of material

Arranging the layers perpendicularly to the thermal flux, the minimum heat conductivity is:

$$\lambda_2{}^s = 1/\,((1 - \varepsilon)/\,\lambda_{SK} + \varepsilon/\lambda_g) \qquad (3.4)$$

Similarly, Misnar (Missenard, 1970) for the airy-space in the shape of a cube, evenly distributed throughout the material, and Ejken for a spherical shape, suggested the two equations:

$$\lambda_{ef} = \lambda_{SK}\,(\,1 - \varepsilon^{\,2/3}) \qquad (3.5)$$

$$\lambda_{ef} = \lambda_{SK}\,((\,1 - \varepsilon)/\,(1 + \varepsilon/2)) \qquad (3.6)$$

For the model of capillary porous structure in the shape of a cube with spherical particles, G.N. Dulnjev suggested the following equation:

$$\lambda_{ef} = \lambda_{SK}\,[\,n^2 + \nu\,(1 - n^2) + (2\,\nu\,n\,(1 - n))/(1 - n\,(1 - \nu))] \qquad (3.7)$$

Where:

ν....λ_g / λ_{SK}

n…. is a feature of capillary-porous structure (function of porosity)

To define effective thermal conductivity, O. Krušer suggested a semi-empirical equation based on a presumption that the material is a combination of two simple structures of parallel plates made of hard material and the gas of equally thick layers, in the parallel and perpendicular arrangement to the heat flux, in the ratio (1 – a) / a of the material volume. This applies:

$$\lambda_{ef}{}^{s} = 1/((1 - a)\,\lambda_1{}^{s} + a/\,\lambda_2{}^{s})) \quad (3.8)$$

Where:

a - the coefficient is dependent on the porosity of material.

For organic and inorganic insulating materials, regardless of diversity in structure and type of the material, a dependence between ε and a, is indicated Table 1.

Table 1 – Dependences between ε and a

ε	0,1	0,2	0,3	0,4	0,5	0,6	0,7	0,8	0,9	0,97
a	0,075	0,09	0,1	0,11	0,18	0,13	0,15	0,174	0,35	0,64

The effective thermal conductivity of the humid material, whether the pores are fully filled with humidity ($\lambda_{ef}{}^{M}$) or partly filled with humidity ($\lambda_{ef}{}^{W}$) is defined by the two equations:

$$\lambda_{ef}{}^{M} = 1/((1- a)/\lambda_1{}^{M} + a/\,\lambda_2{}^{M}) \quad (3.9)$$

$$\lambda_{ef}{}^{W} = 1/((1- a)/\lambda_1{}^{w} + a/\,\lambda_2{}^{w}) \quad (3.10)$$

The course of effective thermal conductivity in some materials depending on porosity is indicated in Fig. 2. The diagram, with the exception of experimental results, also indicates theoretical dependences, and due to the complexity of mathematically recorded phenomena, with greater or smaller precision enables a study of effective thermal conductivity.

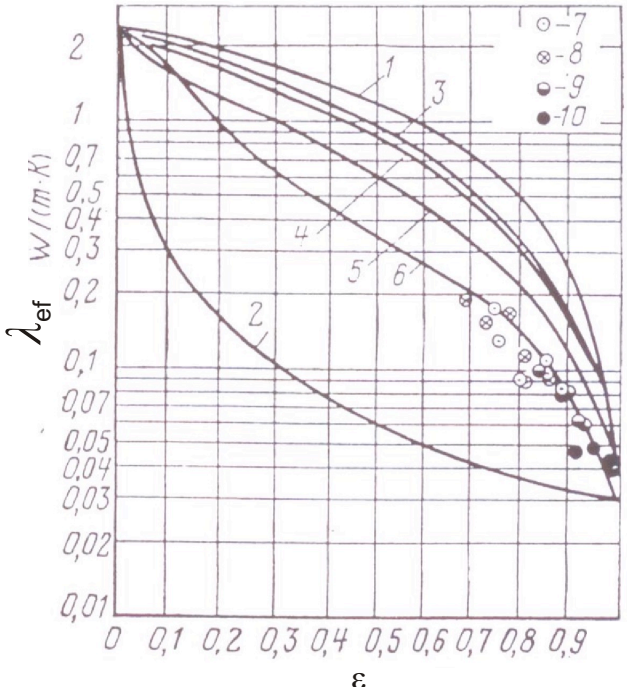

Fig. 2. Dependency of the material effective thermal conductivity on porosity

Legend: 1 – the curved line denoting values, equation (3.5), 2- equation (3.6), 3 – equation (3.7), 4 – equation (3.8), 5 – equation (3.9), 6 – equation (3.10) and experimental results: 7 - foamed concrete; 8 – Perlite concrete; 9 – bituminous concrete; 10 – mineral wool.

4. CONDUCTIVITY OF HUMIDITY

4.1. Humidity Expansion

Results of numerous researches on the conductivity of humidity through the capillary-porous materials in drying chambers and spreading of humidity in the soil, allow the assumption on the presence of a molar and molar-molecular transmission of humidity in the form of a fluid and steam.

Generally speaking, the potential of a substance expanding in the humid material is equal to a partial differential of the appropriate function K of treated material, per mass of the substance, being expanded. Where is:

$$Ø_i = [\delta K/\delta m_i]_{k,\,l,\,mj} \tag{4.1}$$

And k.l.m_j are indices, considering conditions of reciprocal activity of the material and the environment.

The potential of humidity expansion defined in such a way, is called a chemical potential of humidity and can be explained, as follows:

$$\mu_w = [\delta U/\delta m_w]_{V,T,mj} \qquad \mu_w = [\delta h/\delta m_w]_{p,S,\,mj} \tag{4.2}$$

$$\mu_w = [\delta F/\delta m_w]_{V,T,mj} \qquad \mu_w = [\delta G/\delta m_w]_{p,T,\,mj} \tag{4.3}$$

Where is:

U ... internal energy

h… enthalpy ($h = U + p \cdot V$)

F… Helmholz's function ($F = U - T \cdot S$)

G… Gibs' function ($G = U + p \cdot V - T \cdot S$)

Indices p, V, T, S and m_j indicate the constants of pressure, volume, temperature, entropy of humid material and mass of remaining substances in the humid material, except of the searched component (humidity), which is changing.

The chemical potential of humidity in the state of vapour, found in the humid air, depends on the absolute temperature and the partial pressure of water vapour in the humid air. Where is:

$$\mu_w = R \cdot T \cdot \ln\varphi \quad (4.4)$$

The equation (4.3) can be used to define chemical potential by the adsorption, osmosis and capillary bonded humidity, however, under the condition that the humid material is hydroscopic.

The chemical potential of humidity, being expanded in the case of hygroscopic state through the material, is in the first proxy the function of material humidity and the temperature.

$$\mu_{wp} = f_z(U,T) \quad (4.5)$$

By using isothermal desorption of the humid material, an appropriate φ can be established for both given H and T, or the chemical potential of humidity in the humid air, being in the thermodynamic and hygrometric equilibrium with the humid material of given humidity and temperature.

In terms of selecting a universal potential in humidity expansion for whichever humidity of the material, a notion is introduced on the experimental potential of humidity expansion in the material, being defined on the basis of a humid material etalon (cellulose). The cellulose is applied, as it is very hygroscopic and contains all forms of bonded humidity (adsorptive, osmotic and capillary). The cellulose humidity equilibrium does not depend on the temperature of air, but only on the relative humidity φ. The value of experimental potential in the humidity expansion 100ºM has been assigned to the status of cellulose at $\varphi = 1$ or maximum hygroscopic humidity $U_{rmax} = 0{,}277$ kgW/kg_{sm} in the state of absolutely dry cellulose 0ºM.

In the researched material, being in thermodynamic and hygrometric equilibrium with the cellulose, the value of experimental potential ($Ø_e$) of the material at given U and T, can be established with the equation:

$$Ø_e = (U_r \text{ etalon} / U_{r\ max} \text{ etalon}) \cdot 100ºM \quad (4.6)$$

It is very important to point out that the experimental potential of humidity extension in the hydroscopic area is the function of a relative humidity and practically independent of the temperature.

4.2 Humidity Expanding Mechanism

The mechanism of humidity expanding in materials observed from the physical-chemical and physical-mechanical point of view is a composite process. The flow through the capillary-porous material is the sum of the capillary flow and film flow of saturated humidity, and the humidity diffusion flow in the form of vapour.

The mechanism of humidity expansion in the material depends on the mode and type of humidity bonding within the material wrap, material structure, and conditions of reciprocal thermodynamic activity of the material and the environment, as well as on physiological and biochemical processes in the material. Adsorptively bonded humidity is expanding in the material in the form of vapour by a molecular diffusion. The potential of humidity expansion is in this case the partial pressure of water vapour (p_p) in the humid material.

Capillary bonded humidity in the material is molecularly expanded as a fluid. The potential of humidity transmission, in the first case, is the capillary potential (ψ), while in the second case, the partial pressure of water vapour in the material (p_p).

Osmotically bonded humidity is expanded as a fluid in the material, where the potential of humidity expansion is the osmotic pressure. It is evident from the above stated that the potential of humidity expansion in the material depends on the partial pressure of water vapour in the material, on capillary potential, osmotic pressure, concentration of a substance in water solution, temperature, entire pressure, biological activity in the material, etc., and cannot be unambiguously defined.

Conductivity dependence on the humidity expansion potential (a_w) on hydrophilic, hydrophobic and insulating materials is shown in Fig. 3:

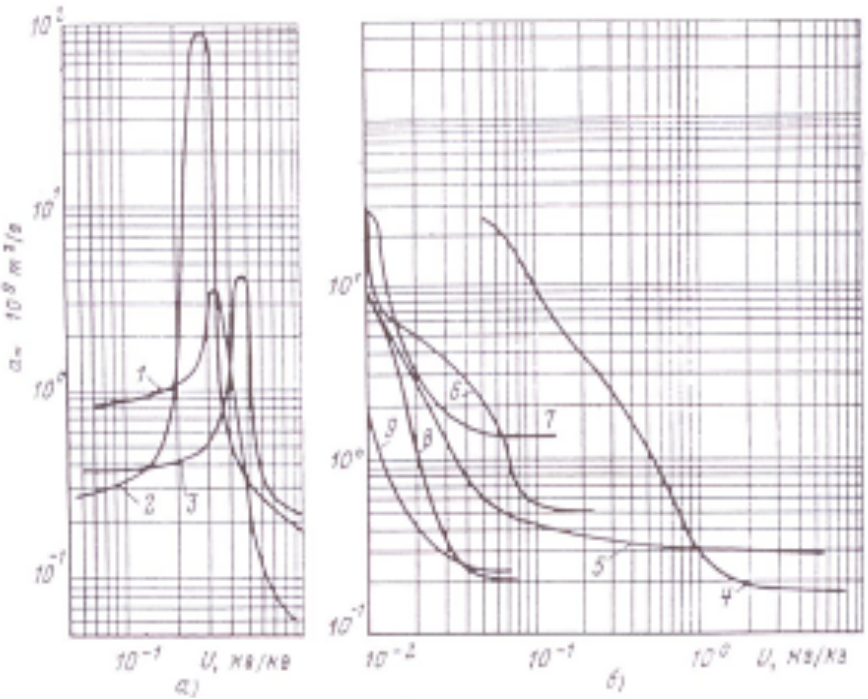

Fig. 3 Conductivities of humidity expansion potential depend on the material humidity

Legend:

a) hydrophilic materials (1 – foamed concrete, 2 – vermiculite-ceramic concrete, 3 – perlite-concrete)
b) hydrophobic materials (4 – Phenol-formaldehyde 'penoplast') F_{RP}-1, 5 – VL, 6 – foam-polystyrolic 'penoplast', 7 – polyvinyl-chloride 'penoplast', 8 – bitumen-vermiculite, 9 – bitumen-perlite)

In a small humidity content of hydrophilic materials (in hygroscopic power) the humidity transmission is mainly determined with vapour diffusion. In the increased thickness of a fluid film on the surface of

pores and capillaries, also the film transmission occurs, which is followed by the capillary one. The conductivity of humidity expansion potential (α_w) starts growing very fast and at a certain content of humidity its maximum is obtained. In further increase of humidity content, the conductivity potential of humidity expansion is reduced.

The analysis of experimental results shows that, the basic form of humidity transmission at low insulation temperatures is that of diffusion. A phase transition of humidity in case of negative temperatures happens directly from the vapour state to the crude state (sublimation); therefore the humidity transmission in a fluidal form can be neglected. Tests show that at low humidity intensity, the process of humidity exchange has a very small impact on the temperature area in the isolation, and can be considered as a stationary. The impact of humidity expansion onto the heat conductivity depends on changed heat conductivity - depending on humidity content. Proportionally to the material saturated with humidity, the conductivity potential of humidity expansion at the spot of sublimation is growing. The process is uninterruptedly running in real conditions, until the material is completely saturated with humidity. If temperatures are positive, the humidity within the material is condensed in the form of a fluid.

The density of humidity flow in conditions of uninterrupted presence of moisture is:

$$q_w = -\rho_{sw}\,\alpha_w\,\mathrm{grad}U \tag{4.7}$$

In non-isothermal conditions the humidity transmission is not carried out due to the gradient of humidity expansion only, but also due to the impact of temperature gradient. Where is:

$$q_w = -\rho_{sw}\cdot a_w \cdot \mathrm{grad}U \pm \rho_{sw}\, a_w \delta_w\, \mathrm{grad}t \tag{4.8}$$

The second link is considering the humidity flow, depending on the thermal conductivity of humidity. δ_w represents a thermo-gradient coefficient of thermal conductivity in the humid material, featuring the intensity of the material flux in the humid material due to a temperature gradient:

$$\delta_w = c_w\,(\delta Ø/\delta t)_u \qquad [\text{kg } H_2O/kg_{sm}K] \tag{4.9}$$

Where $(\delta Ø/\delta t)_u$ is the temperature coefficient of humidity expansion in the humid material.

In U=const., the coefficient is decreasing by temperature growth, while the value of specific isothermal humidity is slightly increasing.

5. ANALYTICAL DEPENDENCES OF HUMIDITY AND THERMAL EXPANSION

Based on the laws of matter and energy conservation, as well as the laws of heat and mass transmission, Likov (Lykov, 1978) established the systems, describing simultaneous transmission of the heat and humidity through capillary-porous materials (bodies).

As the humidity, upon being expanded through a humid material, carries also its enthalpy, the basic law on the temperature expansion in humid materials has the following form:

$$q_n = -\lambda\,(\delta t/\delta n) + q_{wn} i_w \quad [W/m^2] \tag{5.1}$$

Where is:

q_n – the thermal flux through the unit of isothermal surface in the direction of a normal

λ the thermal conductivity of humid material

$(\delta t/\delta n)$ scaleable size of temperature gradient in the direction of a normal to isothermal surface

q_{wn} the humidity flux through the unit of isothermal surface in the direction of a normal

i_w- the specific humidity enthalpy

Under the presumption that there is no volume shrinkage of the humid material, and that the temperature of the wrap is the same as the humidity temperature in the humid material, it can be claimed on the basis of the law on energy conservation that the transformation of the interior energy of the elementary volume of the humid material is equal to the divergence of the thermal flux through the unit of a boundary surface in normal direction, written with a negative symbol and increased by intensity of the heat source, which appears due to the exchange of humidity phase in the material:

$$c_r\rho_{sw}(\delta t/\delta\tau) = -\text{div}\, q_n + q_i = \nabla(\lambda\nabla t) - c_t\rho_t v_t \nabla t - c_p\rho_p v_p \nabla t + r\cdot\varepsilon\cdot\rho_{sw}(\delta U/\delta\tau) \quad (5.2)$$

If the thermal conductivity of the humid material does not depend on coordinates:

$$(\delta t/\delta\tau) = a\nabla^2 t - (c_t\rho_t)/(c_r\rho_{sw})\cdot v_t\nabla t - (c_p\rho_p)/(c_r\rho_{sw})\cdot v_t\nabla t + r/c_r\cdot\varepsilon\cdot\delta U/\delta t \quad (5.3)$$

Where:

a $\lambda/c_r\rho_{sw}$ – is the conductivity of the humid material

c_r $c_{sm} + c_w U$ - is the reduced isobaric specific temperature of the humid material

c_{sm} is the specific temperature of absolutely dry material

c_w is the isobaric specific temperature of humidity

U is absolute humidity of the material

ρ_{sw} is the mass of absolutely dry material in the unit of the humid material volume

c_t is the isobaric specific temperature in the form of fluids

ρ_t is a fluid density

ρ_p is a vapour density

v_t is the advancing speed of fluid vapour

v_p is the speed of humidity advancing in the state of a steamc_p isobaric specific humidity temperature in the form of a steam

r is a phase temperature in the humidity transition from fluid to steam

ε is the criterion of phase transition – a portion of humidity taken away from the volume unit of the humid material within the time unit in the form of vapour ($0 < \varepsilon < 1$).

The two equations (5.2) and (5.3) represent analytical record, defining a change of temperature area in the homogeneous humid material at whichever point of the material or time.

6. HUMIDITY IMPACT ON THERMAL CONDUCTIVITY

In humid capillary-porous materials in the presence of temperature gradient, the expansion of humidity is checked in the direction of a thermal flow. Such reasons, according to A.V. Likov, can be diverse physical processes (depending on the structure of capillary-porous body and humidity, temperature gradient and value).

In conditions of incomplete humidity saturation of the capillary-porous body, which is disposed in the form of a film on the walls of pores, the temperature gradient induces the reduction of gradient in the water surface tension. Under the influence of the gradient of water surface tension, there appears a thermal capillary transfer of water onto the area of greater surface tension, i.e. in the place of a lower

temperature. The flow of the film-humidity due to a thermo-capillary effect according to Derjagin and Meljnikov is the following:

$$q_w(t) = -(h^2 \rho_t \ S_{sp}/2 \eta)\cdot(d\delta/dt)\cdot(dt/dn) \quad (6.1)$$

Where is:

h the thickness of moving film on the surface of pores and capillaries

δ the coefficient of surface tension

η the dynamic viscosity

ρ_t the fluid density (kg/m^3)

S_{sp} the specific surface of capillary-porous body

B. V. Derjagin and G. P. Sidarenkov found out that due to the temperature fall in completely humid capillary-porous bodies a liquid diffusion on the side of a higher temperature or thermo-osmosis can occur. This process is conditioned by diverse specific thermal contents of fluids in the limited thin layer of pores and capillaries. Experiments prove that the effect of fluid transmission towards a thermal flow, due to the thermo-osmosis at a certain gradient of the temperature in a certain point, is actually smaller by two times than the effect of the thermal capillary flow of the fluid in thermal flow direction.

The partial pressure of vapour in the steam-gas mix in pores and capillaries of the humid material, having a larger content of humidity than that of maximally hygroscopic one, is equal to the pressure of saturation at the appropriate body temperature. If we have a temperature gradient in the humid body, also a partial pressure gradient of saturated vapour simultaneously occurs, thus inducing a diffusion flow of humidity in the form of a vapour from the area of a higher temperature to the place of a lower one. The diffusion flow of vapour, as a result of partial pressure gradient for one-direction flow, is expressed as follows:

$$q_{wn} = -\lambda_w(\delta_{ps}/\ \delta_n) \quad (6.2)$$

Dependence of saturated steam pressure on the temperature, within the range from 20 to 90

°C can be defined with a very great precision by means of the empirical equation:

$$p_s = a\ e^{\,b(t-20)} \quad (6.3)$$

Where:

a= is 2666 Pa, and b= 0,046 K^{-1}

By the differential of equation (6.3) per ‘t’ time and by considering the equation (6.3), we get:

$$q_{wn}= -\lambda_w \cdot a\cdot b\cdot e^{\,b(t-20)} \cdot (\delta t/\delta n) \quad (6.4)$$

Where:

λ_w [kg H_2O/msPa]…… is the coefficient of the molar expansion of humidity in the state of vapour

The equation (6.4) represents the intensity of humidity flow depending on vapour diffusion due to the temperature gradient. The equation (6.2) together with the equation (4.14) gives a resulting thermal flux in the humid material.

$$q_{wn}= -a_w \cdot \rho_{sw} \cdot(\delta U/\delta n \pm \delta_w \delta t/\delta n) - \lambda_w (\delta p_s/\delta n) \quad (6.5)$$

Based on experimental researches, carried out on the device – Fig. 4, it can be concluded that the thermo-humid-conductivity is above all the result of a moisture diffusion transmission in the state of vapour on the account of the partial pressure gradient of saturated vapour in the humid material.

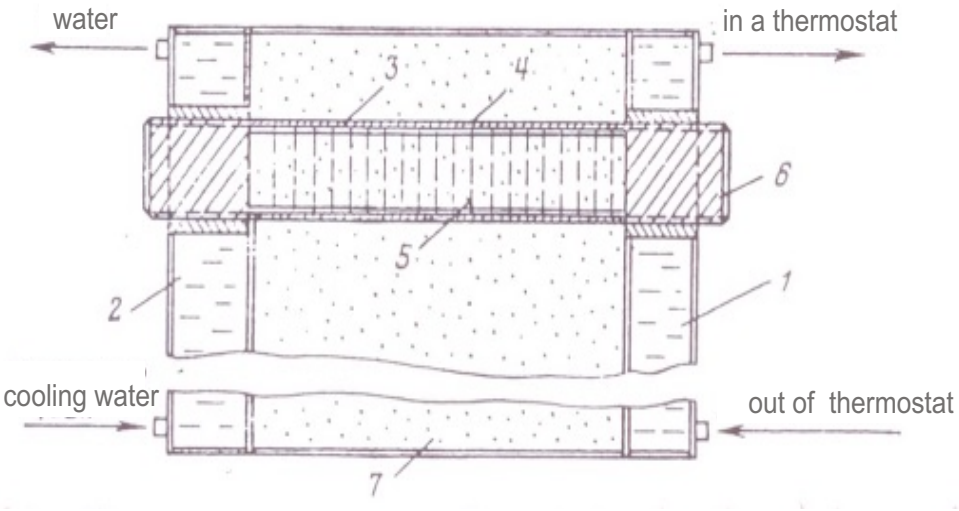

Fig. 4. The scheme of the device for testing (establishing) the thermal – humid-conductivity (Okiljevic, 1991)

Legend:

1- Heated up fluid (thermal oil)

2- Cooled fluid (water)

3- Thin-walled steel tube (1mm thick and 250 mm long)

4- Plastic rings

5- Tested material

6- Blockage (cover)

7- Thermal insulation

During the experimental process the humid material was arranged in a tube and closed with covers. The experiment being over, both covers were taken off. Instead of both covers there was inserted a stopper with a spindle, by means of which a sample of the material was extracted. 12 equal samples were researched at the same time, and 2 to 3 samples screened in different time intervals. The Fig.5 shows measurement results, by means of which a gradual transmission of humidity is defined, and that from warm to cold area, as well as the appearance of the area of conditionally dry material, being extended in time.

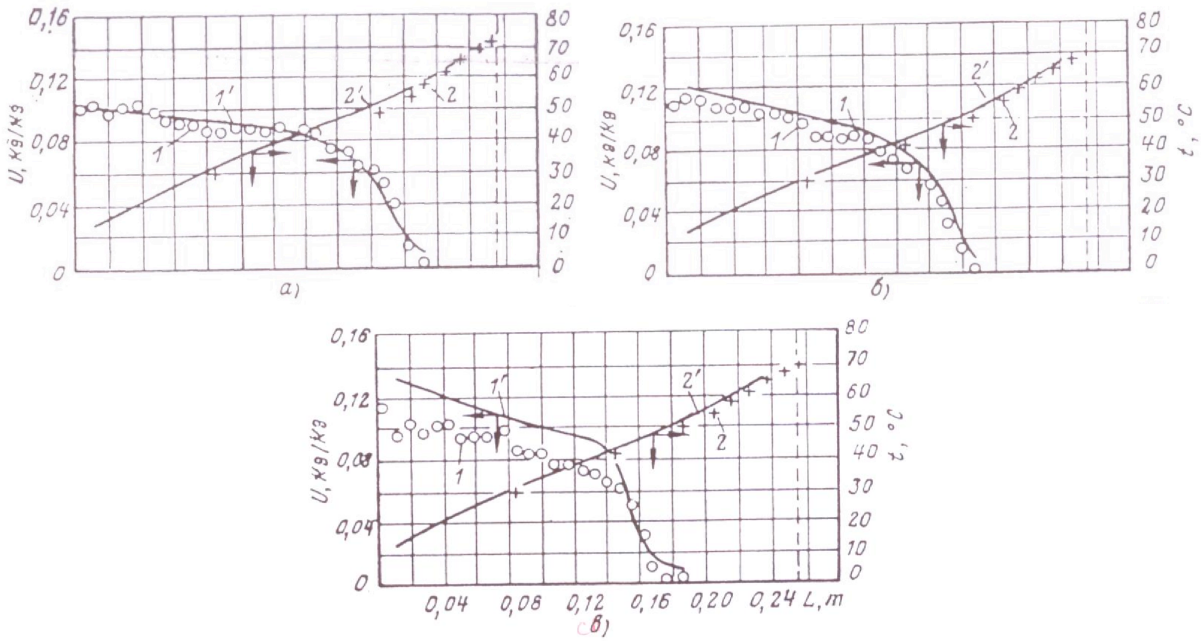

Fig. 5 Kinetics in the exchange of humidity content (1) and temperature (2) for the product made of fireproof sand. (Okiljevic, 1991) Legend:
a) Situation after 6 hours from a start of the experiment
b) Situation after 13 hours from a start of the experiment
c) Situation after 21hours from a start of the experiment
line 1,2 –results of the experiment
line 1′, 2′ - calculation results

It is evident from figure 6.2 that a humidity content in the sample of fireproof sand in a cold area increased from 0,07 to 0,1kg/kg after 6 hours, while after 13 hours to 0,11 kg/kg. The temperature field has been stabilised after few hours already, while the humidity area only after 18 to 20 hours. In the balanced state, there are areas of dry and humid material in the sample with well expressed border, while humidity flows in the state of vapour and fluid, are reciprocally equilibrated. Dependence of thermal conductivity of phenol-'poroplast' on the content of humidity is indicated in Fig. 6.

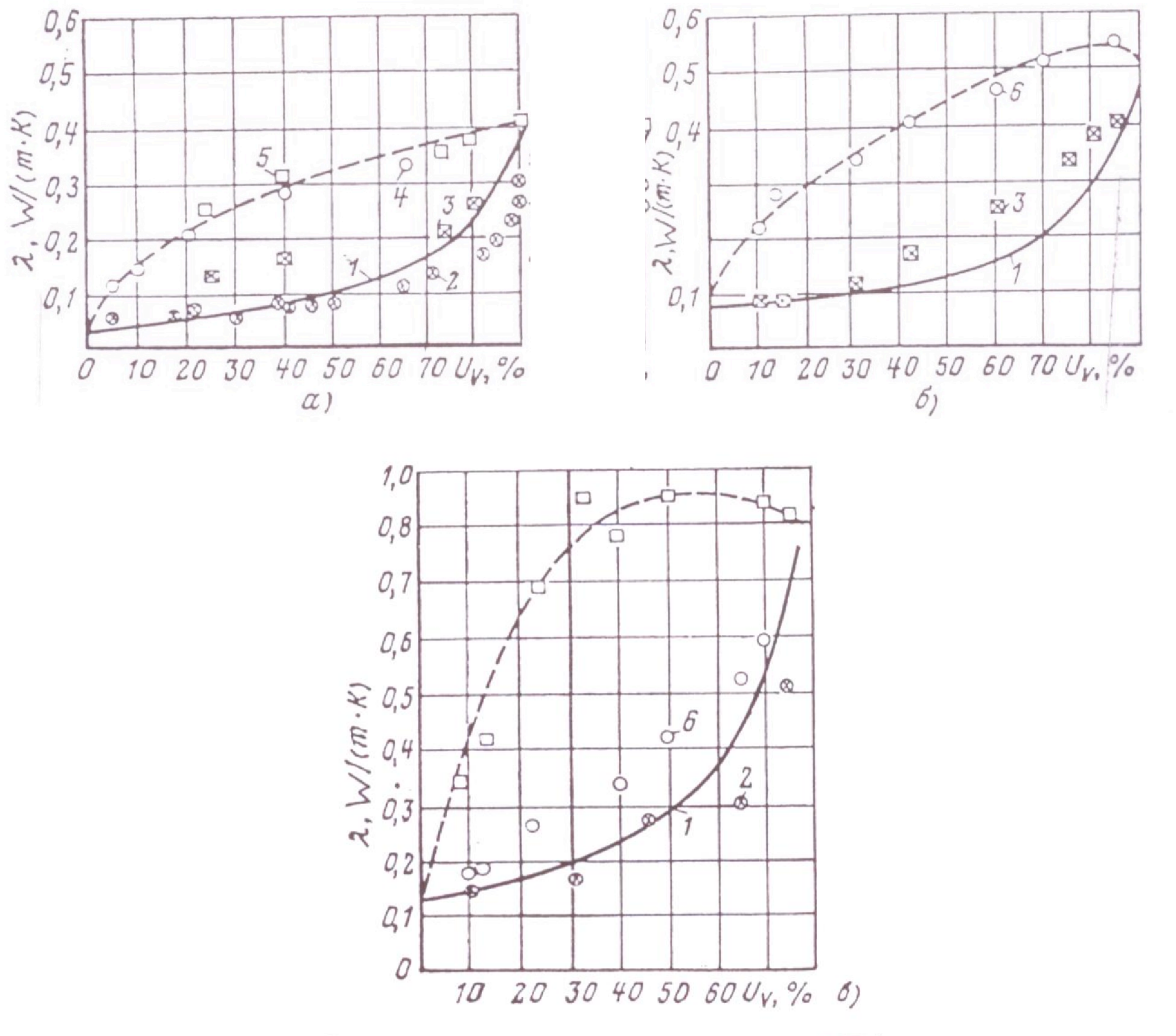

Fig. 6. Thermal conductivity of phenol-'poroplast' - (a), bitumen-perlite - (b) and foamed concrete - (v) depends on humidity. Curves in the figure represent: 1 – value per equation (6.6); 2 – value of experimental results (value 3 at 20 ºC; values 4 and 5 at 70 ºC; value 6 at 50 ºC) (Okiljevic, 1991)

Simeonov experimentally proved that the thermal conductivity at normal temperatures is described precise enough by the equation (6.7), however only up to 40ºC.

$$\lambda_{ef}^{W}=1/[(1-a)/\lambda_1^{w}+a/\lambda_2^{W}] \quad (6.6)$$

Thermal conductivity on the account of a vapour humidity condensation, which penetrates into the humid material, can be defined with the equation:

$$\lambda_{dif} = \lambda_w \cdot r \cdot a \cdot b \cdot e^{b(t-20)} \quad (6.7)$$

Where:

a = is 2666 Pa

r = is evaporating heat

b = is 0,046 K^{-1}

t = is the temperature

A general equivalent thermal conductivity is defined with the sum of two equations (6.7) and (6.8):

$$\lambda_{ekv} = 1/[(1-a)/ \lambda_1^w) + a/ \lambda_2^w] + \lambda_w \cdot r \cdot a \cdot b \cdot e^{b(t-20)} \quad (6.8)$$

Concurrence of experimental results with the theoretical ones can be observed in figure 6. By returning back to the results of samples with fireproof sand (Figure 5), the increase of thermal conductivity in the humid material can be observed on the account of the transmission of vapour humidity, which can be seen at the very beginning of the test. Thermal conductivity of the sample is gradually reduced around a dry zone so that a minimum is obtained in the state of equilibrium, when the flows of vapour and fluid humidity are balanced. Since the temperature field inside the humid sample can be stabilized relatively fast, there is needed more than 5 to 10 hours for the occurrence of a balanced state. It can be concluded that establishing the thermal conductivity by means of stationery methods, the experiments of which do not take longer than 5 – 10 hours, can provide good results.

As it is impossible to define specific exploitation conditions in the experimental earmarking of thermal conductivity in the humid material, it is necessary for the correct estimation and prognosis of insulating properties, depending on the intensity of warm-humid environmental impact, to apply analytical relations, describing joint processes of the thermal and humid transmission on the basis of prepared models.

Table 2 indicates the equivalent and diffusion thermal conductivities depending on the temperature

Table 2 Equivalent and diffusion thermal conductivities

t (°C)	20	40	60	80	100
λ_{dif} (W/mK)	0,0178	0,046	0,110	0,264	0,416
λ_{ekv} (W/mK)	0,0105	0,133	0,197	0,351	0,503

7. CONCLUSION

Increased efficiency of the technological machinery, applying the heat in conditions of very high and low temperatures, dictates a correct selection of insulating materials and their exploitation.

The thermal conductivity and density are two very important features of the insulating material - the smaller their value is, the better their exploitation properties are. With regard to the set demands, insulating materials represent a composite structure of organic and inorganic materials of the maximum porosity and the minimum thermal conductivity.

The intensity of thermal and humid transmission through the insulation material depends on its structure, form, dimensions and arrangement of pores and capillaries, while in a smaller extent also on the chemical composition and physical properties of the material.

In macroscopic systems the transmission of heat depends on diverse concentrations in different points of the system and can be developed through a molar or molecular way. In the fist case, the equalisation of the heat is carried out in the process of mixing molecules due to their chaotic movements, though in the second case by visible mixing of substance/matter moles.

Results of numerous researches on the transition of humidity through capillary-porous materials made in the studies for drying chambers, the humidity expansion in the soil allows a presumption on the presence of the molar and molar-molecular transmission of humidity in the form of fluids and vapour.

To implement the analytical records of processes in the humidity transmission, general laws on the energy and substance transmission is applied.

Desiring to select a universal potential of humidity expansion for any humidity of the material, a notion of experimental potential in expansion of humidity in the material has been introduced, being defined on the basis of the etalon for humid material (cellulose). Cellulose is used for its great hygroscopic ability and contains all forms of bonded humidity (adsorption, osmotic and capillary); likewise, the balanced humidity of cellulose is not depending on the air temperature, but on the relative humidity only.

The mechanism of expanding physical-chemical and physical-mechanical humidity in the material is a very complicated and depends on the mode and form of bonded humidity in the material wrap, material structure, conditions of reciprocal thermodynamic activity of the material and the environment as well as on the intensity of physiological and biochemical processes in the material.

Adsorptive bonded humidity expands in the material in the form of vapour by the way of diffusion (molecularly). The potential of vapour expansion is in this case a partial pressure of water vapour in the humid material.

Capillary bonded humidity in the material is expanded in the form of fluid by molecular way or in the form of vapour. The potential of humidity transmission is in the first case the capillary potential, and in the second one, the partial pressure of water vapour in the material.

The total humidity flow through the capillary-porous material represents a sum of capillary and film flow of the saturated vapour and diffusive humidity flow in the form of vapour.

REFERENCES

1. Cammerer W.F., Die kapillare Flussigkeit Bewegung in porosen Körpern. Dusseldorf, 1963.
2. Krischer O., Die wissenshaftliche Grundlagen der Trocknungstechnik, Springer Verlag, Berlin, 1963.
3. Lykov A.V., Teplomassoobmen, Energija, Moskva, 1978.
4. Missenard F.A., Giblin R. Cours Supérieur de Chauffage. Ventilation et Conditionner, 1970.
5. Okiljevic M., Laboratorijska aparatura za merenje toplotne prevodnsoti materiala i konstrukcija. Mašinski fakultet, Beograd, 1991.
6. Pfundstein M., Insulating Materials, Principles, Materials, Applications, 1st edition, Munich, 2008.
7. Smirnov H., Transport phenomena in capillary – porous structures and heat pipes, CRC Press, 2010
8. Tritt T.M., Thermal Condictivity: Theory, Properties and Applications, Kluwer Academic, 2004