ANALYSIS OF THE CONDITIONS FOR SELF-FEEDING IN SEPARATOR TOOLS FOR SURFACE PLASTIC DEFORMATION

Nely Asenova Georgieva[1], Veselin Ivanov Grigorov[2], Stefan Vasilev kostadinov[3]

[1]Technical College – Yambol, Trakian University – Stara Zagora, «Graf Ignatiev» street, №38, 8600 Yambol, Bulgaria, e-mail: ngeorgieva@tk.uni-sz.bg

[2]Rousse University «Angel Kanchev», "Studentska" street 8, 7017 Rousse, Bulgaria, department «Machine building technology», e-mail: vgrigorov@ru.acad.bg

[3] Rousse University «Angel Kanchev», "Studentska" street 8, 7017 Rousse, Bulgaria, department «Machine building technology», e-mail: svk@ru.acad.bg

Abstract:

It is theoretically analyzed the influence of crossing the instrument axis and the conical deformed rollers in terms of the self-feeding through surface plastic deformation (SPD) over the ratio between the size of the contact zones of deformation elements with supporting cone and the machining details. It is established the presence of local extremes of this ratio with an amendment of the crossing angle. The possibility for different conditions of transmission of torque through the tool' work is shown so as to achieve greater processing speeds and to use more large deformation forces.

Key words: *surface plastic deformation, self-feeding, contact zones*

1. INTRODUCTION

In the separator tools for finishing processing by surface plastic deformation (SPD), which work with self-feeding, the axes of their deformation elements (conical rollers) are crossed angle β (Fig.1) toward to the tool axis [Vitliemov V., 1987; Konovalov E, 1968]. In this way the self-feeding of the tool or detail is provided. The self-feeding force, which arises in this case, makes easy axis moving SPD tool and loading of the machine feed mechanisms. Moreover, in the contact zones between deformation rollers and machining surface, there is created more favourable conditions for the deformation effect over the metal surface layer standing elastic and plastic deformations [Gorohov V., 1978; Kostadinov V., 2009; Suchkov A., 1974]. This increases the durability of rollers and channels of the separator, which provides their fixed layout.

Not at any angle β, which are turned deformation conical rollers, it is provided possibility for achieving tool's optimum operating circumstances and which will be up to the requirements of machining surface's roughness. However, it should be taken into account the assumption that the average pressure in the contact zone between deformation rollers and machining surface p_1 and with supporting cone p_2 are in functional correlation $p_1<p_2$. And the need arises to determine the value of angle β, which provides greater durability of the instrument and transmission of higher torque at higher speeds of processing and application of more large deforming forces.

The initial point contact of the rollers with supporting cone (in case of $\beta\neq0$) affects substantially on the size of the contact zones compared with cases of initial line contact (in case of $\beta=0$). It is necessary to examine the relevant conditions for the tool's work [Jasimov M., 1974].

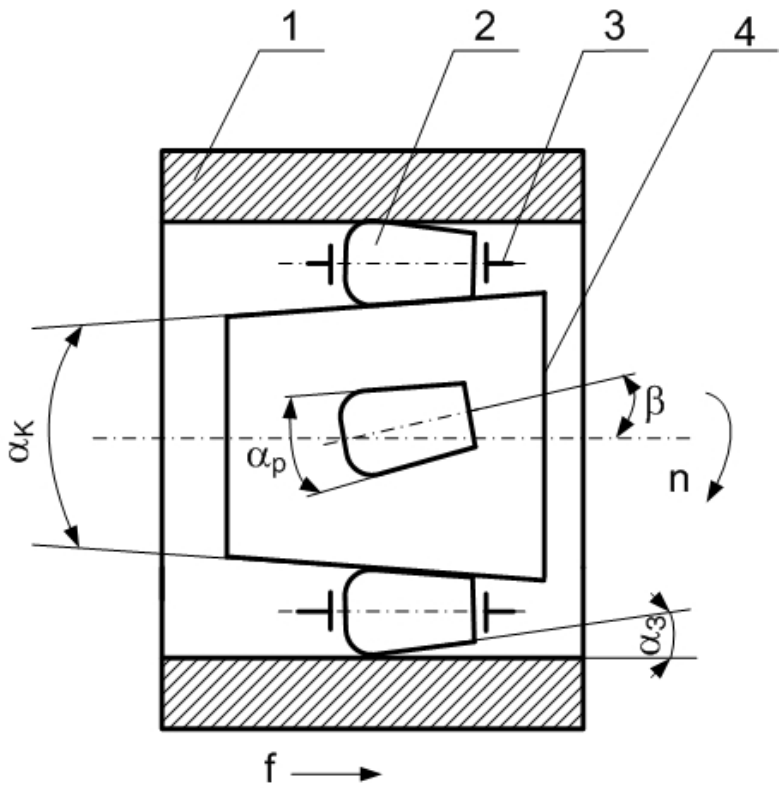

Fig.1. Scheme of kinematic interaction of SPD:

1 – machining detail; 2 – deformation rollers; 3 – separator; 4 – supporting cone

For this purpose it is necessary to determine the influence of angle β on the size of the contact zones and their correlation.

2. DETERMINATION OF THE MAGNITUDE OF THE CONTACT ZONE BETWEEN CONE DEFORMATION ROLLERS AND SUPPORTING CONE

To determine the contact stain between the deformation element and supporting cone, it is accepted the following prerequisites:

- The material of the deformation element and the supporting cone is homogeneous and isotropic;
- Roughness of the contact surfaces is ignored;
- The nature of the deformations is elastic;
- The initial contact is in a point.

According to the decision of the contact task (Hertz, H. 19881, Dinnik A.N., 1909, Striberck R., 1901) in these conditions, the contact zone has an elliptical shape [Jasimov M., 1974; Kostadinov V., 2009] and its area is given by:

$$S = \pi.a.b \qquad (1)$$

The dimensions of the semi-axes of the ellipse a and b and is determined by the relations [Gorkunov D., 1975; Kostadinov V., 2005]:

$$a = \nu_1 \left[\frac{3}{8} \cdot \frac{F}{\sum K} \left(\frac{4}{E_1} \left(1 - \mu_1^2\right) + \frac{4}{E_2} \left(1 - \mu_2^2\right) \right) \right]^{\frac{1}{3}} \quad (2)$$

$$b = \nu_2 \left[\frac{3}{8} \cdot \frac{F}{\sum K} \left(\frac{4}{E_1} \left(1 - \mu_1^2\right) + \frac{4}{E_2} \left(1 - \mu_2^2\right) \right) \right]^{\frac{1}{3}} \quad (3)$$

where F - size of the applied deformation force;

$\sum K$ - amount of main curvature of the interacted surfaces и,

$$\sum K = K_{11} + K_{12} + K_{21} + K_{22}; \quad (4)$$

K_{11} и K_{12} - main curves of supporting cone in two mutually perpendicular at the contact point;

K_{21} и K_{22} - main curves of the deformation roll in two mutually perpendicular planes at the contact point;

μ - Poisson ratio, which for steel solids is $\mu_1 = \mu_2 = 0{,}3$;

E - module of elasticity of the material – $E_1 = E_2 = 2{,}1.10^{11} Pa$;

ν_1 и ν_2 - coefficients taking into account the curvature of surfaces of elastic solids in place of their touching; their values are set according to the tabular according to cosine of the subsidiary angle τ [table 1, Pinegin S.V., 1969].

When turning the deformation cone roller to angle β the planes, which define the main curves no longer coincide respectively with the axis of the supporting cone and a plane perpendicular to it. They are turned so that the intersection of two planes coincide with the tangents to the left and right conical screw line with angles of upsurge $\gamma_1 = 90^\circ - \beta/2$ и $\gamma_2 = \beta/2$, each of which is described on both interacted conical surfaces.

In general, the projection of each screw lines in the plane xOy is a spiral (Fig.2). Projection of any tangential to the screw line in the plane xOy is tangent to the spiral. Then the angle ψ, concluded between the tangent in any point of the spiral and the radius-vector of that point will be permanent. This property is typical only for a logarithmic spiral. Therefore, the screw line, described over the cone is logarithmic line and its projection in the plane xOy is a logarithmic spiral. It is assumed that the conical surfaces are turned so that the logarithm screw lines on them to touch exactly at the point of initial contact of the roller and supporting cone. The contact points of the two cones are respectively cross points of the left and right logarithmic screw lines described on them, too and they lie in the plane xOy. Then

$$\cos\tau = \frac{-K_{11} + K_{12} - K_{21} + K_{22}}{K_{11} + K_{12} + K_{21} + K_{22}} \quad (5)$$

Required value of $\cos\tau$ depends only from the main curves of the two main solids, which are determined according to the formula:

$$K = \frac{\sqrt{(\ddot{z}\dot{y} - \ddot{y}\dot{z})^2 + (\ddot{x}\dot{z} - \ddot{z}\dot{x})^2 + (\ddot{y}\dot{x} - \ddot{x}\dot{y})^2}}{\left(\sqrt{\dot{x}^2 + \dot{y}^2 + \dot{z}^2}\right)^3} \quad (6)$$

To find the derivatives of second order is necessary to obtain parametric equations of the screw line over the cone [Korn G., 1970].

Polar equation of the logarithmic spiral (Fig.3) is:

$$R = a.e^{\theta.m} \quad (7)$$

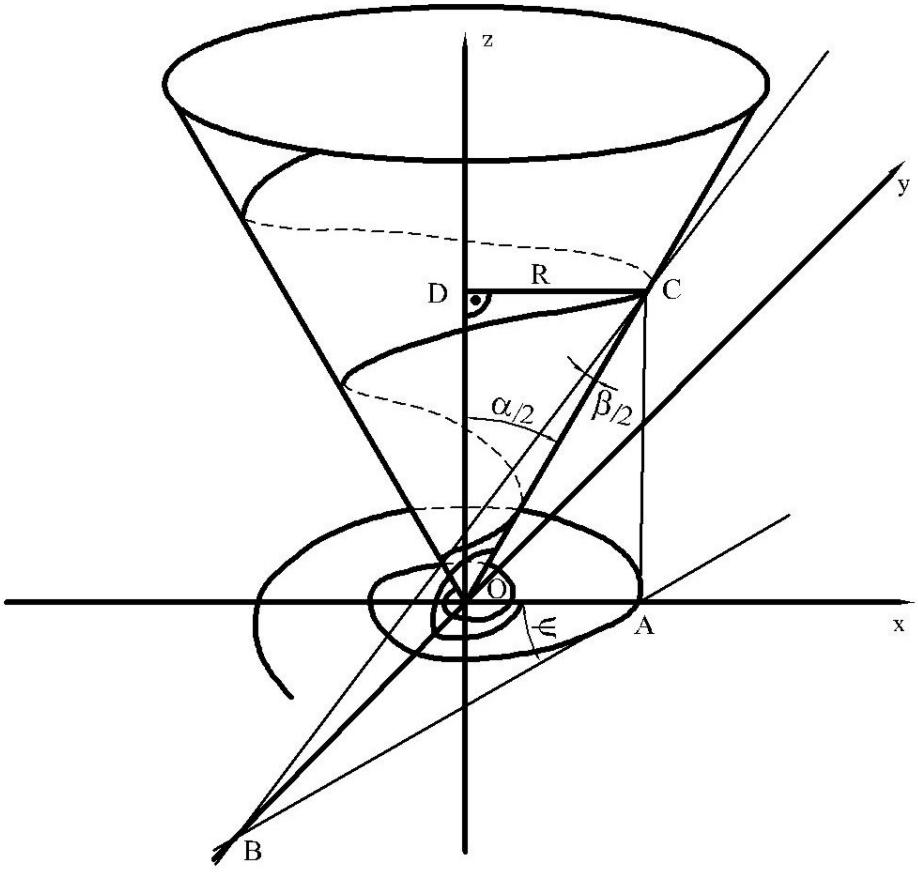

Fig.2. Scheme for determining the angle ψ

where:

R is radius-vector at any point on the logarithmic spiral (projection of the logarithmic screw line on the cone) and can be obtained after measuring the radius of the cone in the selected section.

a – value of R with $\theta = 0^\circ$ (Fig.3)

$m = ctg\psi$ – parameter that determines how "tight" and in what direction is rotated the spiral, m.

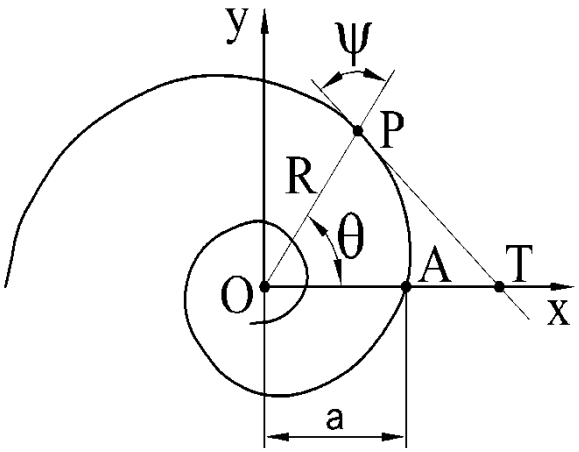

Fig.3. Parameters of the logarithmic spiral

To determine the angle ψ it is used Fig.2 and rectangular triangles *ODC*, *BOC* and *AOB*. Of these, it follows that:

$$\psi = arctg\frac{tg\frac{\beta}{2}}{\sin\frac{\alpha}{2}}, \quad \text{respectively for a parameter } m \text{ is obtained} \tag{8}$$

$$m = \frac{\sin\frac{\alpha}{2}}{tg\frac{\beta}{2}}, \tag{9}$$

where α is the angle at the apex of the respective cone (roll or supporting cone).

In these parametric equations of the logarithmic spiral in rectangular coordinates is:

$$x = a.e^{\theta.m}\cos\theta \tag{10}$$

$$y = a.e^{\theta.m}\sin\theta \tag{11}$$

The third coordinate z is obtained from the rectangular triangle *ODC*, according Fig.2.

$$z = \frac{R}{tg\frac{\alpha}{2}} \text{ or } z = \frac{a.e^{\theta.m}}{tg\frac{\alpha}{2}} \tag{12}$$

After the appropriate substitutions and transformations and acceptance that $\theta = 0° + 2\kappa\pi$, where κ is a number from the natural order of numbers for K is obtained:

$$K = \frac{1}{a_{P(K)}} \sqrt{\frac{\frac{m^2}{tg^2\frac{\alpha}{2}}\left(2m^4 - 2m^3 - m^2 + 1\right) - 4m^5 + 5m^4 + 4m^3 - 2m^2 + 1}{\left(m^2 + 1 + \frac{m^2}{tg^2\frac{\alpha}{2}}\right)^3}} \tag{13}$$

where $a_{P(K)} = R_{P(K)}$ and respectively

R_P is large radius of deformation element;

R_K – radius of the supporting cone at the intersection, in which lies the initial point of contact of deformation element and supporting cone.

Then the main curvature of the screw lines described on the supporting cone are

$$K_{11} = \frac{1}{a_K} \sqrt{\frac{\frac{m_{11}^2}{tg^2\frac{\alpha_K}{2}}\left(2m_{11}^4 - 2m_{11}^3 - m_{11}^2 + 1\right) - 4m_{11}^5 + 5m_{11}^4 + 4m_{11}^3 - 2m_{11}^2 + 1}{\left(m_{11}^2 + 1 + \frac{m_{11}^2}{tg^2\frac{\alpha_K}{2}}\right)^3}} \tag{14}$$

$$K_{12} = \frac{1}{a_k} \sqrt{\frac{\frac{m_{12}^2}{tg^2\frac{\alpha_k}{2}}\left(2m_{12}^4 - 2m_{12}^3 - m_{12}^2 + 1\right) - 4m_{12}^5 + 5m_{12}^4 + 4m_{12}^3 - 2m_{12}^2 + 1}{\left(m_{12}^2 + 1 + \frac{m_{12}^2}{tg^2\frac{\alpha_k}{2}}\right)^3}} \tag{15}$$

Formulas for the main curvature of the screw lines described on the deformation cone roll are:

$$K_{21} = \frac{1}{a_p} \sqrt{\frac{\frac{m_{21}^2}{tg^2\frac{\alpha_p}{2}}\left(2m_{21}^4 - 2m_{21}^3 - m_{21}^2 + 1\right) - 4m_{21}^5 + 5m_{21}^4 + 4m_{21}^3 - 2m_{21}^2 + 1}{\left(m_{21}^2 + 1 + \frac{m_{21}^2}{tg^2\frac{\alpha_p}{2}}\right)^3}} \tag{16}$$

$$K_{22}=\frac{1}{a_p}\sqrt{\frac{\frac{m_{22}^2}{tg^2\frac{\alpha_p}{2}}\left(2m_{22}^4-2m_{22}^3-m_{22}^2+1\right)-4m_{22}^5+5m_{22}^4+4m_{22}^3-2m_{22}^2+1}{\left(m_{22}^2+1+\frac{m_{22}^2}{tg^2\frac{\alpha_p}{2}}\right)^3}} \quad (17)$$

The determination of m is done by (18) and the angles α and β take values with the different curves as follows:

In calculating	Instead of $\frac{\beta}{2}$	Instead of $\frac{\alpha}{2}$
m_{11}	$\frac{\beta}{2}$	$\frac{\alpha_k}{2}$
m_{12}	$90-\frac{\beta}{2}$	$\frac{\alpha_k}{2}$
m_{21}	$\frac{\beta}{2}$	$\frac{\alpha_p}{2}$
m_{22}	$90-\frac{\beta}{2}$	$\frac{\alpha_p}{2}$

Values of curvatures obtained by formulas (14), (15), (16) and (17) are replaced in (5) and calculate $\cos\tau$. In Table1 [Pinegin S.V., 1969] coefficients ν_1 and ν_2 are determined and in formulas (2) and (3) the semi-axes of the contact stain are calculated. The contact stain's surface is determined by the formula (1).

3. DETERMINING THE SIZE OF CONTACT ZONE BETWEEN THE CONE DEFORMATION ROLL AND PROCESSING SURFACES

To determine the contact stain between the deformation element and supporting cone, the following prerequisites are excepted [Макушок Е., 1988]:

- Deformation element is absolutely solid;

- Roughness of contact surfaces is ignored;

- The nature of deformation in the workpiece is fully plastic;

The contact of the deformation element (Fig.4) are realized by toroid part, which with an acceptable approximation can be represented as a spherical segment and the cone [Jasimov M., 1986]. The size of

the contact zone – S_O will be the sum of the contact area of the spherical part – S_1 and that one of the conical part of the roll, which is outside of the cylindrical surface of the workpiece – S_2.

$$S = S_1 + S_2 \tag{18}$$

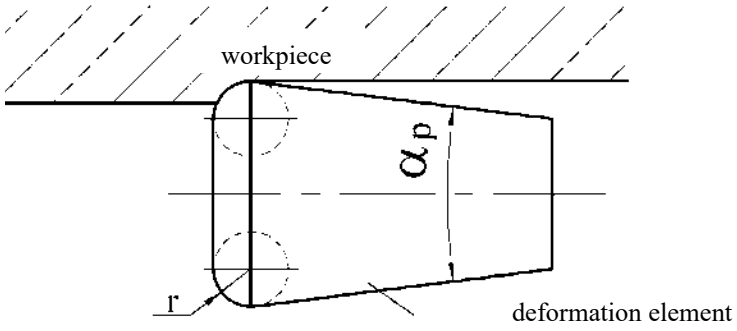

Fig.4. General view of the contact - roller with the workpiece in axial section

3.1. Determining the size of the spherical part of deformation roll depending on its contact with the workpiece

The half of segment's surface *ACB* from the sphere (Fig.5) is given by

$$S_1 = 2\pi rh = \pi r \frac{D_{инстр.} - D_{заг.}}{2} \tag{19}$$

where r is radius of curvature at large base of the cone roll;

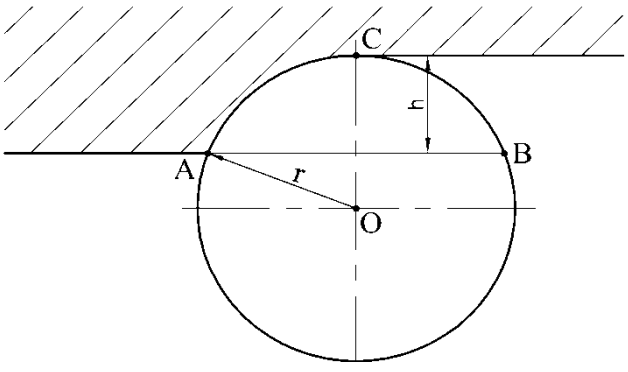

Fig.5. General view of the contact between roll and the workpiece in the radial direction

h – half the difference between the diameters of the tool $D_{инстр.}$ and the workpiece surface $D_{заг.}$.

3.2. Determining the size of the contact stain between the conical part of the deformation workpiece

Axis of the deformation element is rotated angle β in the plane xOz and in the plane yOz - angle γ (Fig.7). To find the surface of the conical part S_2, which is outside from the cylinder (contact area) using the formula:

$$S_2 = \iint_D \sqrt{1+\left(\frac{\partial z}{\partial x}\right)^2+\left(\frac{\partial z}{\partial y}\right)^2}\,dxdy \tag{20}$$

where area D is projection of demanded plane in the plane xOy.

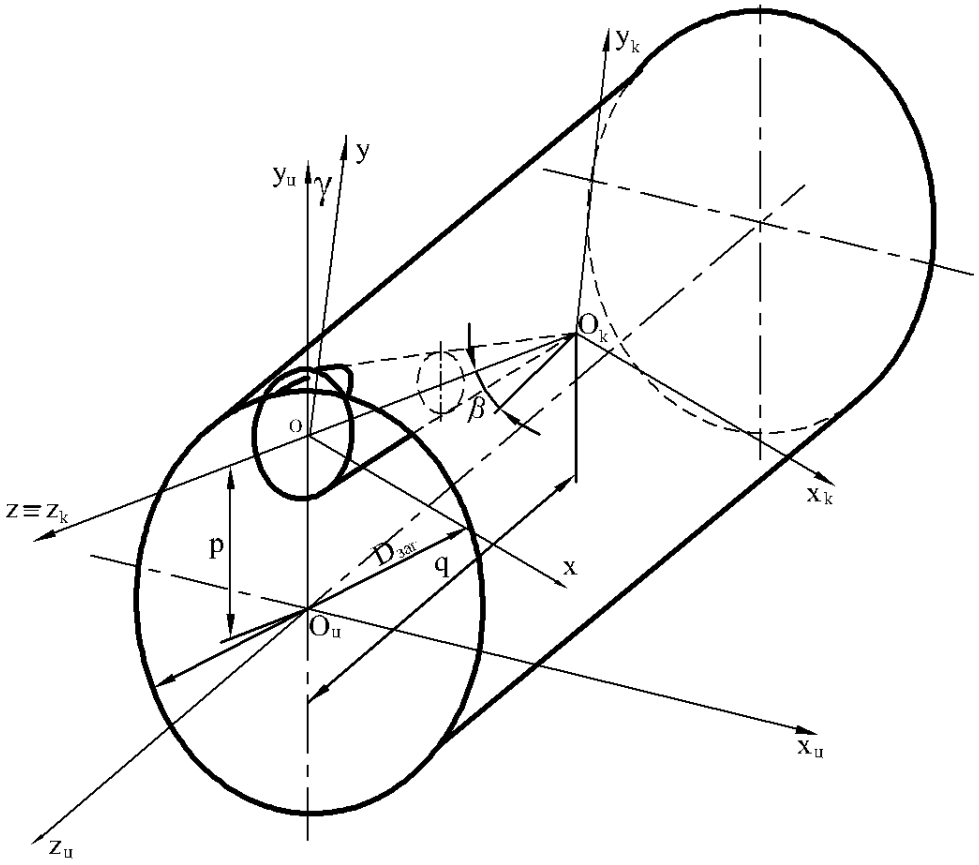

Fig.6. Scheme of the contact stain between the cone part of the roll and workpiece

In determining the boundaries of the double integral and the integrand function is necessary to use equations of the both cylindrical and conical surfaces.

For the coordinate system $xOyz$ it is in force following coordinates transformations: $X_k = x$; $Y_k = y$; $Z_k = z - q$, where the equation of the cone surface assumes a type

$$x^2 + y^2 - \frac{a^2}{c^2}(z-q) = 0 \tag{21}$$

Equation in the cylindrical surface $x_ц O_ц y_ц z_ц$ is:

$$x_ц^2 + y_ц^2 = R^2 \tag{22}$$

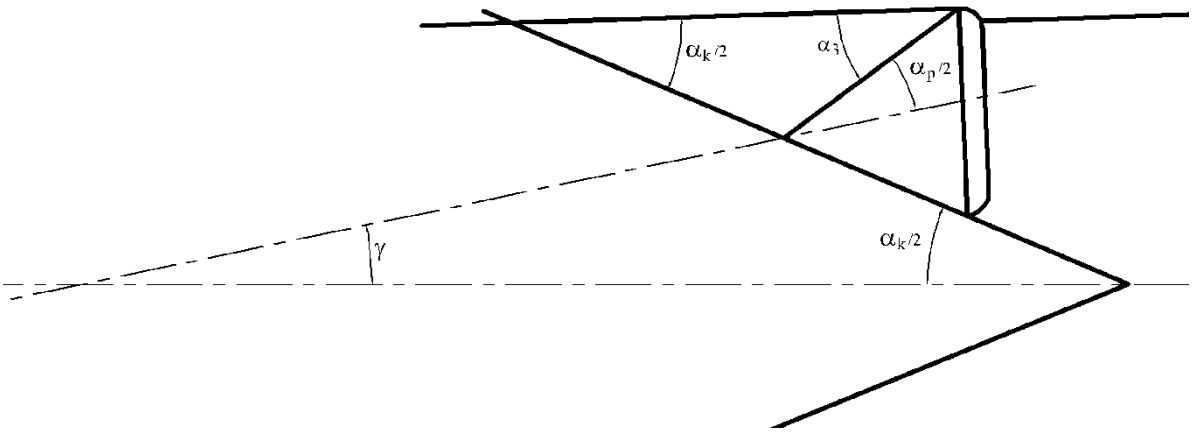

Fig.7. Scheme of the roll's angular position toward the supporting cone

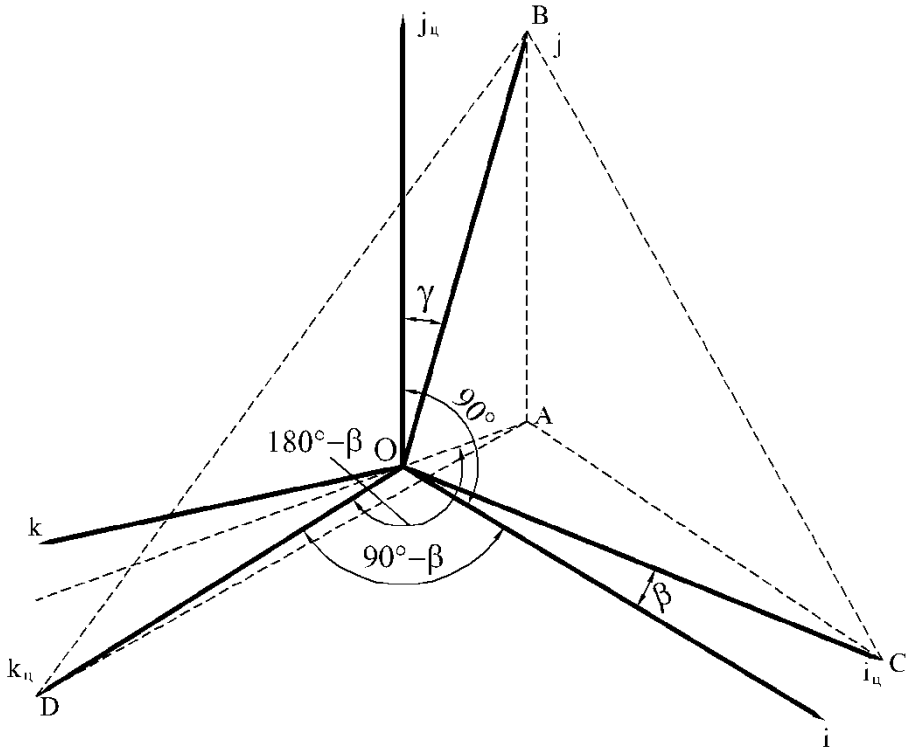

Fig.8. Scheme for determination the director cosines

When switching in the coordinate system it is going on change of the coordinates using the formulas for spatial translation and rotation, in accordance with the scheme of Fig.8.

$$x_u = x.\cos\beta + z.\sin\beta \tag{23}$$

$$y_u = x.\sin\gamma.\sin\beta + y.\cos\gamma - z.\sin\gamma.\cos\beta + p \tag{24}$$

Equation in the cylindrical surface $xOyz$ is:

$$(x.\cos\beta + z.\sin\beta)^2 + (x.\sin\gamma.\sin\beta + y.\cos\gamma - z.\sin\gamma.\cos\beta + p)^2 = R^2 \tag{25}$$

At the intersection of cone and cylindrical surfaces with the plane $z = 0$ equations respectively on curve *1* and *2* are obtained (Fig.9)

$$1: x^2 + y^2 - \frac{a^2}{c^2}q^2 = 0 \tag{26}$$

$$2: nx^2 + sy^2 + Vxy + Ax + By + k = 0 \tag{27}$$

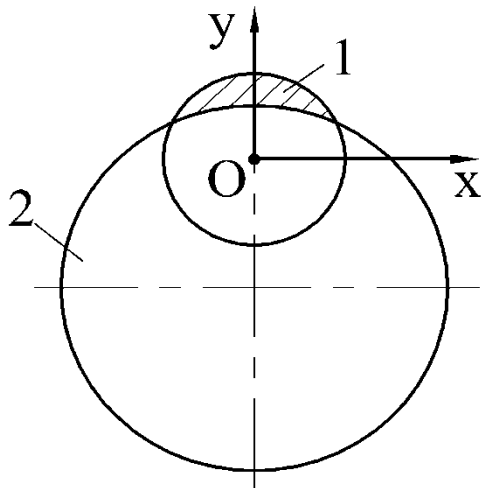

Fig.9. Scheme for the intersection of the surface of the roll and workpiece

where:

$$n = \cos^2\beta + \sin^2\gamma.\sin^2\beta$$

$$s = \cos^2\gamma$$

$$V = 2.\sin\gamma.\cos\gamma.\sin\beta$$

$$A = 2.p.\sin\gamma.\sin\beta$$

$$B = 2.p.\cos\gamma$$

$$k = p^2 - R^2$$

The boundaries of the internal integral are determined by:

- curve *2*

$$y_1 = \frac{-(B + V.x) + \sqrt{(B + V.x)^2 - 4s(nx^2 + A.x + k)}}{2.s}; \tag{28}$$

- curve *1*

$$y_2 = \sqrt{-x^2 + \frac{a^2}{c^2}q^2}\,. \tag{29}$$

The boundaries of the external integral are determined as y and equation (26) is replaced in (27)

$$nx^2 + s\frac{a^2}{c^2}q^2 - sx^2 + \sqrt{\frac{a^2}{c^2}q^2 - x^2}.(V.x + B) + A.x + k = 0 \tag{30}$$

After some transformations, which include square radical removal and accepting

$$x = z - \frac{V - A(s-n)}{2V^2.(s-n)^2}$$

the rational equation is obtained

$$Z^4 + g_1 Z^2 + g_2 Z + g_3 = 0, \tag{31}$$

where:

$$g_1 = -6\left[\frac{\mathrm{V - A(s-n)}}{2\mathrm{V}^2(s-n)^2}\right]^2 + \frac{B^2 - \frac{a^2}{c^2}\cdot q^2.V^2 - 2(s-n)\left(k + s.\frac{a^2}{c^2}\cdot q^2\right)}{V^2(s-n)^2}$$

$$g_2 = 8\left[\frac{\mathrm{V - A(s-n)}}{2\mathrm{V}^2(s-n)^2}\right]^3 - 2\frac{B^2 - \frac{a^2}{c^2}\cdot q^2.V^2 - 2(s-n)\left(k + \frac{a^2}{c^2}\cdot q^2\right)}{V^2(s-n)^2}.\left[\frac{\mathrm{V - A(s-n)}}{2\mathrm{V}^2(s-n)^2}\right] +$$

$$+ \frac{2A\left(k + s.\frac{a^2}{c^2}\cdot q^2\right) - 2B.\frac{a^2}{c^2}.q^2.V}{V^2(s-n)^2}$$

$$g_1 = -6\left[\frac{\mathrm{V}-\mathrm{A(s-n)}}{2\mathrm{V}^2(s-n)^2}\right]^2 + \frac{B^2 - \frac{a^2}{c^2}\cdot q^2.V^2 - 2(s-n)\left(k + s.\frac{a^2}{c^2}\cdot q^2\right)}{V^2(s-n)^2}$$

$$g_2 = 8\left[\frac{\mathrm{V}-\mathrm{A(s-n)}}{2\mathrm{V}^2(s-n)^2}\right]^3 - 2\frac{B^2 - \frac{a^2}{c^2}\cdot q^2.V^2 - 2(s-n)\left(k + \frac{a^2}{c^2}\cdot q^2\right)}{V^2(s-n)^2}.\left[\frac{\mathrm{V}-\mathrm{A(s-n)}}{2\mathrm{V}^2(s-n)^2}\right] +$$
$$+ \frac{2A\left(k + s.\frac{a^2}{c^2}\cdot q^2\right) - 2B.\frac{a^2}{c^2}.q^2.V}{V^2(s-n)^2}$$

$$g_3 = -3\left[\frac{\mathrm{V}-\mathrm{A(s-n)}}{2\mathrm{V}^2(s-n)^2}\right]^4 + \frac{B^2 - \frac{a^2}{c^2}\cdot q^2.V^2 - 2(s-n)\left(k + s.\frac{a^2}{c^2}\cdot q^2\right)}{V^2(s-n)^2}.\left[\frac{\mathrm{V}-\mathrm{A(s-n)}}{2\mathrm{V}^2(s-n)^2}\right]^2 -$$
$$- \frac{2A\left(k + s.\frac{a^2}{c^2}\cdot q^2\right) - 2B.\frac{a^2}{c^2}.q^2.V}{V^2(s-n)^2}.\left[\frac{\mathrm{V}-\mathrm{A(s-n)}}{2\mathrm{V}^2(s-n)^2}\right] + \frac{\left(k + s.\frac{a^2}{c^2}\cdot q^2\right)^2 - B^2.\frac{a^2}{c^2}.q^2}{V^2(s-n)^2}$$

The roots of equation (31) will be

$$\begin{aligned} Z_1 &= \frac{1}{2}\left(\sqrt{Y_1} + \sqrt{Y_2} + \sqrt{Y_3}\right) \\ Z_2 &= \frac{1}{2}\left(\sqrt{Y_1} - \sqrt{Y_2} - \sqrt{Y_3}\right) \\ Z_3 &= \frac{1}{2}\left(-\sqrt{Y_1} + \sqrt{Y_2} - \sqrt{Y_3}\right) \\ Z_4 &= \frac{1}{2}\left(-\sqrt{Y_1} - \sqrt{Y_2} + \sqrt{Y_3}\right) \end{aligned} \tag{32}$$

where Y_1, Y_2 and Y_3 are roots of the following cubic equation

$$Y^3 + (2g_1)Y^2 + \left(g_1{}^2 - 4g_3\right)Y - g_2{}^2 = 0 \tag{33}$$

Moreover square root must be taken with such signs that

$$\sqrt{Y_1}.\sqrt{Y_2}.\sqrt{Y_3} = -g_2 \tag{34}$$

After substitution $Y = t - \frac{2g_1}{3}$ it is obtained the rational equation of the type:

$$t^3 + (3m_1)t \pm 2m_2 = 0 \tag{35}$$

where:

$$m_1 = \frac{g_1{}^2 - 4g_3}{3} - \frac{4g_1{}^2}{9}$$
$$m_2 = \frac{(2g_1)^3}{27} - \frac{2g_1\left(g_1{}^2 - 4g_3\right)}{6} + \frac{g_2{}^2}{2} \quad (36)$$

When putting $sh3\rho = \frac{m_2}{\sqrt{m_1{}^3}}$ the roots of (35) are:

$$t_1 = \mp 2.\sqrt{m_1}.sh\rho$$
$$t_2 = \pm\sqrt{m_1}.sh\rho + i\sqrt{3m_1}.sh\rho \quad (37)$$
$$t_3 = \pm\sqrt{m_1}.sh\rho - i\sqrt{3m_1}.sh\rho$$

and the roots of (33) are:

$$Y_1 = -\frac{2g_1}{3} \mp 2.\sqrt{m_1}.sh\rho$$
$$Y_2 = -\frac{2g_1}{3} \pm \sqrt{m_1}.sh\rho + i\sqrt{3m_1}.sh\rho \quad (38)$$
$$Y_3 = -\frac{2g_1}{3} \pm \sqrt{m_1}.sh\rho - i\sqrt{3m_1}.sh\rho$$

where m_1 received from the formula (36)

The roots of (31) will be:

$$x_{1,2,3,4} = Z_{1,2,3,4} - \frac{V - A(s-n)}{2V^2(s-n)^2} \quad (39)$$

If (35) has a type:

$$t^3 - (3m_1)t \pm 2n = 0, \quad (40)$$

Then its roots will be:

$m_1{}^3 < m_2{}^2$	$m_1{}^3 > g_2{}^3$	$m_1^3 = g_2^2$
$t_1 = \mp 2.\sqrt{m_1}.sh\rho$	$t_1 = \mp 2.\sqrt{m_1}.\cos\rho$	$t_1 = \mp 2.\sqrt{g_1}$
$t_2 = \pm\sqrt{m_1}.sh\rho + i\sqrt{3m_1}.sh\rho$	$t_2 = \pm 2\sqrt{m_1}.\cos(60° - \rho)$	$t_2 = \pm\sqrt{m_1}$
$t_3 = \pm\sqrt{m_1}.sh\rho - i\sqrt{3m_1}.sh\rho$	$t_3 = \pm 2\sqrt{m_1}\cos(60° + \rho)$	$t_3 = \pm\sqrt{m_1}$

The roots for t, which are obtained in this way should be put in $Y = t - \frac{2g_1}{3}$ and it is by observing of the condition (34). After that, it is selected two real roots x_1 and x_2 from equation (30),

which, together with y_1 from (28) and y_2 from (29) are used to define the field D in the definition of S_2 in (20).

After expressing z the from equation cone surface (21), the equation (20) obtains the type

$$S_2 = \iint_D \sqrt{1+\left(\frac{cx}{a\sqrt{x^2+y^2}}\right)^2+\left(\frac{cy}{a\sqrt{x^2+y^2}}\right)^2}\,dxdy = \iint_D \sqrt{1+\frac{c^2}{a^2}}\,dxdy \tag{41}$$

or

$$S_2 = \int_{x_1}^{x_2} dx \int_{\frac{-(B+V_x)+\sqrt{(B+V_x)^2-4s\left(nx^2+A_x+k\right)}}{2s}}^{\sqrt{-x^2+\frac{a^2}{c^2}q^2}} \sqrt{1+\frac{c^2}{a^2}}\,dy = \sqrt{1+\frac{c^2}{a^2}}\,(I_1+I_2+I_3-I_4), \tag{42}$$

where I_1, I_2, I_3 and I_4 are definite integrals with limits from x_1 to x_2, which have types

$$I_1 = \int_{x_1}^{x_2} \sqrt{\frac{a^2}{c^2}q^2-x^2}\,dx = \frac{x_2^2}{2}\sqrt{\frac{a^2}{c^2}q^2-x_2^2}+\frac{a^2}{2}(\arcsin\frac{x_2}{a}-\arcsin\frac{x_1}{a})-\left(\frac{x_1^2}{2}\sqrt{\frac{a^2}{c^2}q^2-x_1^2}\right) \tag{43}$$

$$I_2 = \int_{x_1}^{x_2} \frac{B}{2s}dx = \frac{B}{2s}(x_2-x_1),\quad I_3 = \int_{x_1}^{x_2} \frac{V}{2s}dx = \frac{V}{4s}\left(x_2^2-x_1^2\right), \tag{44}$$

And the last integral is Abel's type and can be solved by using Euler's substitutions.

$$I_4 = \int_{X_1}^{X_2} \frac{\sqrt{x^2\left(V^2-4sn\right)+x\left(2BV+4sA\right)+\left(B^2+4sk\right)}}{2s}dx =$$

$$= \frac{1}{2}\left(x+\frac{BV+2sA}{V^2-4sn}\right)\sqrt{\left(V^2-4sn\right)x^2+\left(2BV+4sA\right)x+\left(B^2+4sk\right)}\Big|_{X_1}^{X_2} +$$

$$+\frac{4\left(V^2-4sn\right)\left(B^2+4sk\right)-\left(2BV+4sA\right)^2}{8\left(V^2-4sn\right)\sqrt{V^2+4sn}}\cdot arch\frac{2\left(V^2-4sn\right)x_1+\left(2BV+4sA\right)}{\sqrt{\left(2BV+4sA\right)^2-4\left(V^2-4sn\right)\left(B^2+4sk\right)}}\Big|_{X_1}^{X_2} \tag{45}$$

Calculated by (19) and (42), respectively S_1 and S_2, are substituted in (18) and the size of the contact stain between the workpiece and the deformation element is determinate.

4. CONCLUSION

On the basis of baseline assumptions should be expected that angle β would have optimal size at maximum ratio S_1 / S_2, because this mean the average pressure in the plastic zone will increased (roll – workpiece).

The obtained results allow to find such values for angle β, corresponding to the expected ratio of local maximum of S_1 / S_2. In implementing these conditions the realization of the displacement effect in the plastic zone will be combined with appropriate values of self-feeding whose speed increases with increasing angle β. This allows achieving higher productivity of the processing.

The accomplishment of the above options could be facilitated if the further research considers a theoretical- experimental nature, in which graphically could obtain the optimal combination between contact's areas of the deformation roll and the size of angle β. This will find indirect confirmation by power process' parameters.

REFERENCE

1. Vitliemov V.D. Theory and design of tools for processing by the surface rotating deformation. Abstract of thesis for degree of Doctor of Technical Sciences, Sofia, 1987.
2. Gorohov V.A. Processing of the details by plastic deformation, Kiev, Techniques, 1978.
3. Gorkunov D.N. „ Tribotechnology". Moscow, Machine building, 1985.
4. Dinnik A.N. Impact and compression of elastic bodies. News of Kiev Polytechnics, vol.4, 1909.
5. Jasimov M.M. Quality management details of surface plastic machining. Alma-Ata, Science, 1986.
6. Jasimov M.M. Shape and area of surface contact of tool and workpiece in surface plastic deformation. Machine building newspaper, №7, 1974, pages 44-46.
7. Pinegin S.V. Contact resistance and rolling resistance, Moscow, Machine building, 1969.
8. Konovalov, E.G., V.A.Sidorenko. Finishing and hardening rotary surfaces' treatment. Minsk, High school, 1968.
9. Korn G., T.Korn Mathematics guide. Moscow, Science, 1970.
10. Kostadinov V.S. Combined machining by turning and surface plastic deformation. Abstract of thesis for degree of Doctor of Technical Sciences, Sofia, 2005.
11. Kostadinov V.S., M. K. Karshakov. About the productivity and skid in the contact point of the deformation rolls with SPD, Varna, Machine building and machine knowledge, Journal, vol. 2, 2009, c.64-69.
12. Kostadinov V.S., N.Georgieva Liquid of the metal in the surface layer by treatment with a combined tool for surface plastic deformation. Journal of the Technical University of Gabrovo, vol.3, 2009.

13. Макushoк E.M., T.V.Kalinovskaia Theoretical basis of processes of surface plastic deformation. Minsk, Science and Technology, 1988.
14. Suchkov A.G., B.N.Bonev Surface strengthened through plastic deformation in terms of skid between the deformation element and treated surface. Research papers of Technical University ”Angel Kanchev”, Rousse, vol.XVI, 1974.
15. Hertz, H. Über die Berührung fester elastischer Körper. J. für Reine und Angewandte Mathematik. 19881, Bd.92.
16. Striberck R. Kugellager für Beliebinge Belastungen, Z.V.D.Y., 1901, Bd.45.