Journal of International Scientific Publication:
Materials, Methods & Technologies, Volume 3

AN OPTİMAL FUZZY PID POWER SYSTEM STABILIZER FOR SINGLE MACHINE INFINITE BUS SYSTEM

Hasan ÇİMEN[1] and Seçil VARBAK NEŞE[2]

[1,2]Technical Education Faculty, Electrical Education Department,

Afyon Kocatepe University, 03200, Afyon, Turkey.

E-mail: [1]hcimen@aku.edu.tr, [2]secilvarbak@aku.edu.tr

Abstract

This study represents a design of an optimal fuzzy Proportional Integral Derivative (PID) power system stabilizer for single machine infinite bus power system. The aim of the control is to enhance the stability and to improve the dynamic response of the single machine infinite bus power system operating at different conditions. Speed deviation and acceleration of synchronous machine are chosen as the input signals to the fuzzy controllers. These variables take significant effects on damping of the generator shaft mechanical oscillations. The three parameters of PID controller are computed using the fuzzy membership functions depending on these variables. The inference mechanism of the fuzzy PID controller is represented by three (7x7) decision tables. The controller is simulated for implementing of the study. The simulations are performed under different operating conditions. Also a mechanical disturbance which has square wave waveform and 0,5 magnitude is injected to system from T_m input point during 0,5 s. Simulation results also are compared with conventional power system stabilizer, PID power system stabilizer and fuzzy power system stabilizer in order to show effectiveness of the proposed controller.

Key Words: *Power system stabilizer, fuzzy PID controller, single-machine infinite-bus model, fuzzy logic.*

1. INTRODUCTION

It is well known that the overall stability of power systems can be enhanced by applying supplementary control signals to the generator excitation control loops. The supplementary signal is generated through Power System Stabilizer (PSS) (Hiyama, 1994). PSSs have been widely used to enhance the system damping and to improve the dynamic stability of power systems for many years (Doraraju and Nondy, 2000).

The possibility of using the voltage control loops, in order to introduce artificial damping of the rotor speed oscillations, was initially devised by Dandeno and by Schleif, in the early sixties. A simple linearized model, representing a synchronous generator connected to an infinite bus through on external impedance was described by Heffron and Philips in the early fifties. The suitability of Heffron and Philips model for the analysis of low-frequency oscillations was only fully recognized after the publication of the study made by de Mello and Concordia in the late sixties (Deckmann and da Costa, 1994). Hadman and Hughes (1977) used the multi-variable frequency-response methods of Rosenbrock and MacFarlane and pole-zero analysis to demonstrate why the PSS is effective (Fadlalmoula et al., 1998).

In 1981 general concepts associated with applying PSS utilizing shaft speed, ac bus frequency, electrical power inputs and tuning concepts of it were developed by Larsen and Swann. In 1988, a PID

controller was designed as PSS on Single Machine Infinite Bus (SMIB) system using generator frequency and voltage as inputs of controller and was compared with Conventional PSS (CPSS) by Radman and Smaili. In 1990 a PI PSS was designed using closed loop eigenvalue sensitivity by Reza and Choudhry. In 1992 the fuzzy logic based PSS, which was developed by Hiyama and Sameshima (1991), was modified using nonlinear membership function by Shi et al. In 1993 an excitation controller based on fuzzy set theory was designed using speed deviation and acceleration signals by Hsu and Cheng. In 1994 a fuzzy controller was implemented to a 5 kVA synchronous machine in a laboratory by Hasan et al. In 1994 a FLPSS was applied as experimental and was carried out simulation for five machine infinite bus system by Hiyama. In 1995 a FLPSS was designed for a five machine power system numerical model, was implemented for SMIB physical model by El-Metwally and Malik. In 1996 a PID controller designed with direct design method and implemented for small/medium size generator by Godhwani and Basler. In 1997 a FPSS which adapted by an adoption rule based on the Lyapunov's direct method was developed for SMIB system by Hosseinzadeh and Kalam. In 1998 a FLPSS combined with a fuzzy PI controller was designed for SMIB system by Ferreira et al. In 2006 a Takagi-Sugeno FLPSS was designed with CDCARLA method for SMIB model by Kashki et al. In 2007 a novel evolutionary search technique based on PSO was presented for tuning of PID controller and PSS parameters, Takagi-Sugeno fuzzy logic was used to obtain off-nominal parameters of controllers by Mukherjee and Ghoshal.

In this paper an optimal Fuzzy PID (FPID) PSS is designed for SMIB power system. Speed deviation and acceleration of synchronous machine are chosen as the input signals to the fuzzy controllers. The three parameters of PID controller are computed using three fuzzy controllers. The inference mechanism of the FPID controller is represented by three (7X7) decision tables. The FPID PSS is compared with CPSS, PID PSS and Fuzzy PSS (FPSS) for three different loading conditions. Simulation results and performance indexes are showed. The best performance is obtained by the FPID PSS for all loading conditions.

2. SYSTEM AND LOADING CONDITIONS

In this paper, excitation control of a synchronous generator is connected to infinite bus through an external reactance X_E as shown in Fig. 1 is worked. Here V_b is infinite bus voltage, X_E is line reactance, V_t is terminal voltage of generator and synchronous generator is shown with constant voltage (E') behind constant reactance (X'_d).

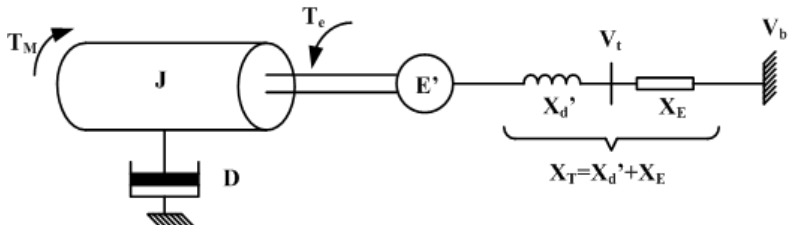

Figure 1. A synchronous generator connected to infinite bus.

Dynamic behavior of SMIB system is shown with linearized Philips-Heffron model as shown in Fig.2. This model is third order model and it is the minimum model required to study synchronous generator

dynamics where excitation control (AVR) and supplementary excitation control (PSS) action are of interest.

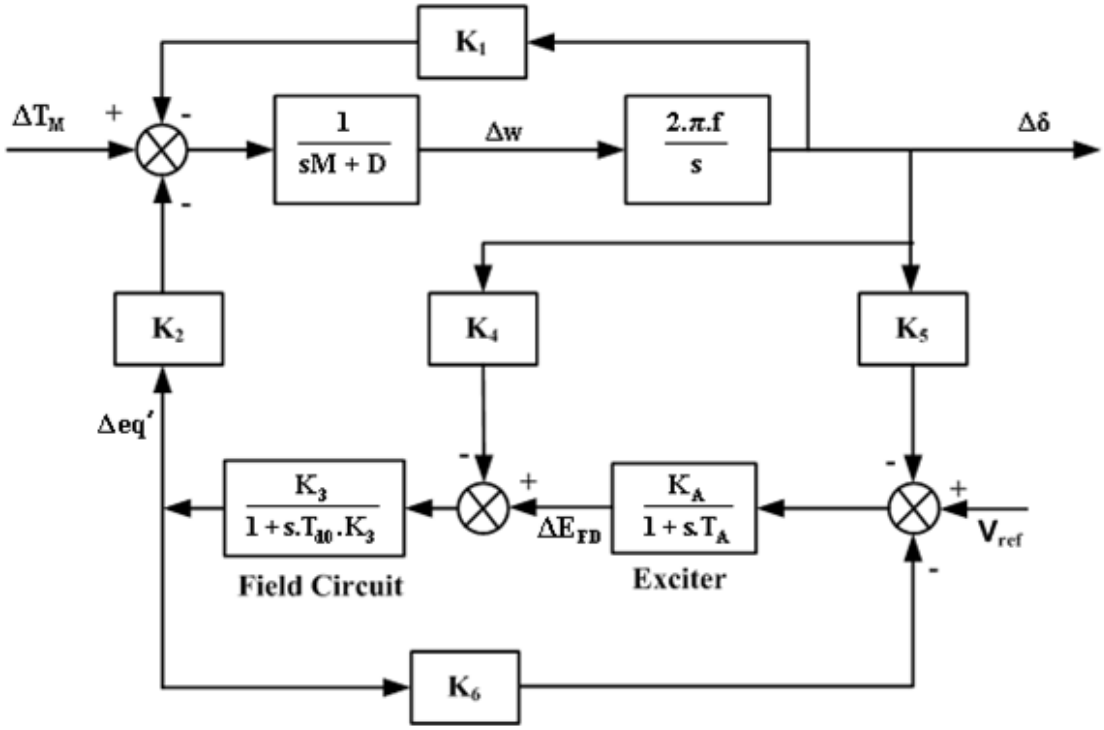

Figure 2. Linearized SMIB system model (Chung et al. 1999).

Values of SMIB system are given at Table 1. Used operating conditions are taken from Chung et al. 1999. Initial rotor angle is 0.1 for all applications. At 5th second, 0.5 unit disturbance is injected to system from ΔT_M input point during 0.5 second in order to see controller performance.

Table 1 - System and exciter parameters (Chung et al. 1999).

D	f	M	T_{do}	K_a	T_a
0	60	9.26	7.76	50	0.05

3. FUZZY PID PSS

Conventional PID controllers continue to be popular in industrial process control due to their familiarity and simplicity (Wang, 2002). In practice, most physical systems have inherently intractable characteristics such as high order and non-linearities (Juang et al., 2007). However conventional PID structure is not able to provide good damping for very complicated plants (Birdwell and Wang, 1994). Therefore, research into the area of nonlinear control is required (Lo and Sadegh, 2002).

A class of non-conventional type of PID controller employing fuzzy logic has been designed for this purpose (Tang et al., 2001).

Block diagram of proposed Fuzzy PID (FPID) PSS is shown in Fig.3. By fuzzy inference system, parameters of K_p, K_i and K_d are adjusted adaptively. For adjusting these parameters, three Sugeno type fuzzy controllers are used. The main reason is that Sugeno type fuzzy controller works well with linear techniques (ex, PID control).

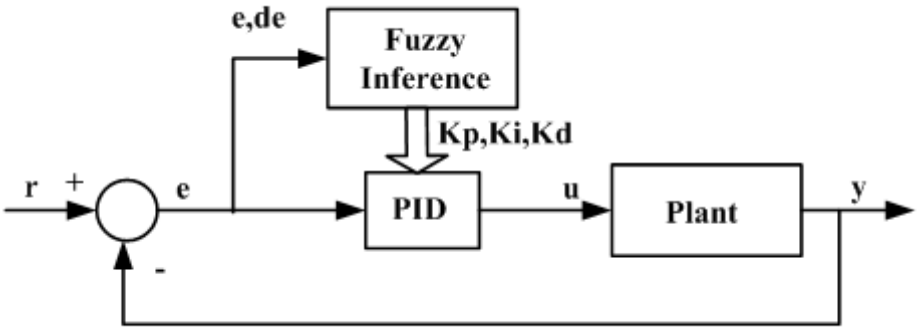

Figure 3. Block diagram of FPID PSS

Speed deviation and acceleration of synchronous machine are chosen as input signals to fuzzy controllers. Due to system is nonlinear; seven sigmoid membership functions (NB: Negative Big, NM: Negative Middle, NS: Negative Small, Z: Zero, PS: Positive Small, PM: Positive Middle, PB: Positive Big) are used for the fuzzy inputs. Seven constant membership functions are used for fuzzy controller output. For all variables, range is [-2, 2]. So all signal can be processed at controllers. Due to outputs of fuzzy controllers are very small, they are amplified with Kp=30, Ki=1.569, Kd=2.159 based on conventional PID controller.

The output signals of fuzzy controllers are obtained using the following principles:

- If the speed deviation is negative and tends to decrease, then Kp and Kd must be decreased, but Ki must be increased.
- If the speed deviation is negative and tends to increase, then Kp and Kd must be little increased, but Ki must be little decreased.
- If speed deviation is positive and tends to decrease, then Kp and Kd must be little increased, but Ki must be little decreased.
- If speed deviation is positive and tends to increase, then Kp and Kd must be increased, but Ki must be decreased.
- If speed deviation is zero and tends to decrease, then Kp and Kd must be little decreased, but Ki must be little increased.
- If speed deviation is zero and tends to increase, then Kp and Kd must be increased, but Ki must be little decreased.

Rule tables which are used for determination K_p, K_i, K_d parameters of FPID controller are given Table 2, 3 and 4, respectively.

Table 2 - K_p rule table

Kp	pΔw						
Δw		**NB**	**NM**	**NS**	**Z**	**PS**	**PM**	**PB**
	NB	NB	NB	NM	NS	NS	Z	PS
	NM	NB	NM	NM	NS	Z	PS	PS
	NS	NM	NM	NS	Z	PS	PM	PM
	Z	NS	NS	Z	PS	PM	PM	PB
	PS	NS	Z	PS	PM	PM	PM	PB
	PM	Z	PS	PM	PM	PM	PB	PB
	PB	PS	PM	PM	PB	PB	PB	PB

Table 3 - K_i rule table

Ki	pΔw						
Δw		**NB**	**NM**	**NS**	**Z**	**PS**	**PM**	**PB**
	NB	PB	PB	PM	PM	PS	PS	Z
	NM	PB	PM	PM	PS	PS	Z	NS
	NS	PM	PM	PS	PS	Z	NS	NS
	Z	PM	PS	PS	Z	NS	NS	NM
	PS	PS	PS	Z	NS	NS	NM	NB
	PM	PS	Z	NS	NS	NM	NM	NB
	PB	Z	NS	NS	NM	NB	NB	NB

Table 4 - K_d rule table

Kd	pΔw						
Δw		**NB**	**NM**	**NS**	**Z**	**PS**	**PM**	**PB**
	NB	NB	NB	NM	NS	NS	Z	PS
	NM	NB	NM	NM	NS	Z	PS	PS
	NS	NM	NM	NS	Z	PS	PM	PM
	Z	NS	NS	Z	PS	PM	PM	PB
	PS	NS	Z	PS	PM	PM	PM	PB
	PM	Z	PS	PM	PM	PM	PB	PB
	PB	PS	PM	PM	PB	PB	PB	PB

4. SIMULATION STUDIES

The performances of FPID PSS are compared with CPSS, PID PSS and FPSS. CPSS data is taken from Chung et al. 1999. Parameters of PID PSS are calculated by Ziegler-Nichols method as K_p=30, K_i=1.569, K_d=2.159. Mandani type fuzzy logic controller is used for FPSS. Speed deviation and acceleration of synchronous generator are used as input signals of FPSS. Rule table of FPSS is taken from Abdelazim and Malik 2003. Due to system is nonlinear, seven sigmoid membership functions are used for input and output signals of FPSS. Ranges are [∓0.0155] for speed deviation, [∓0.091] for acceleration, [∓0.5] for output variable that are based on CPSS. The effectiveness of FPID PSS on the dynamic responses of a SMIB system is demonstrated in Fig.4-6. It is obvious that FPID PSS is superior to CPSS, PID PSS and FPSS.

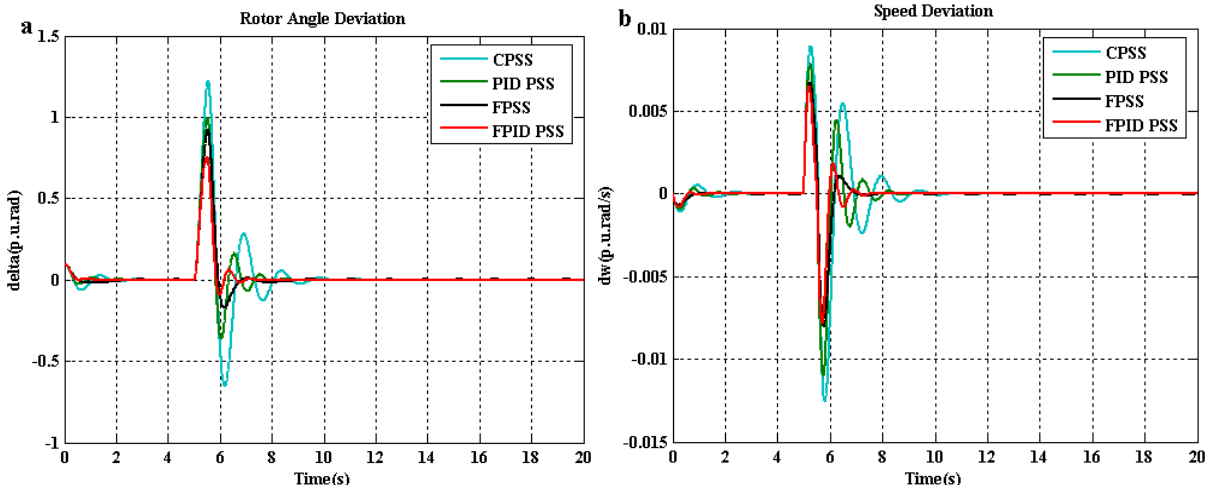

Figure 4. Rotor angle deviation (a) and speed deviation (b) simulation results in case 1.

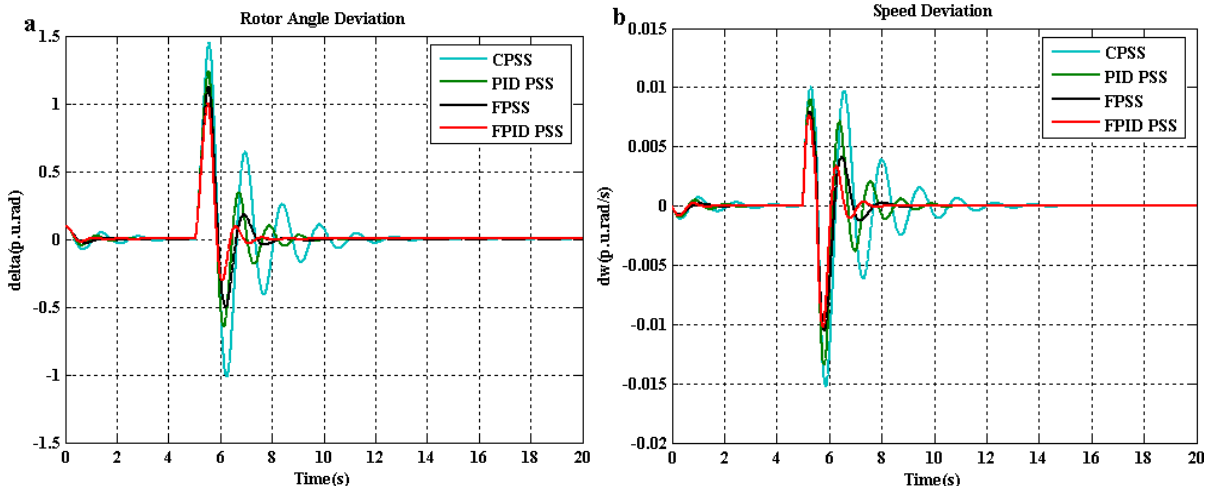

Figure 5. Rotor angle deviation (a) and speed deviation (b) simulation results in case 2.

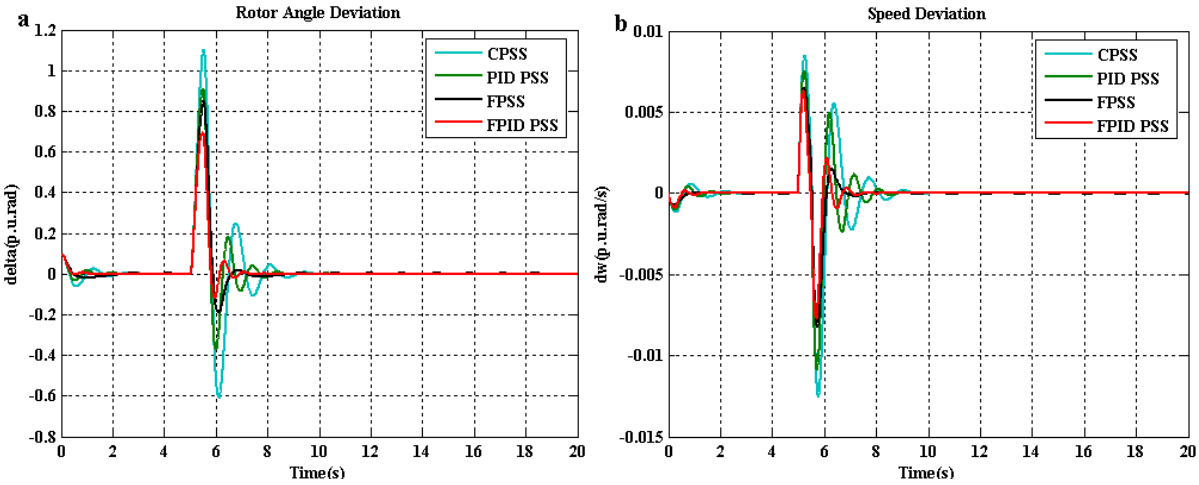

Figure 6. Rotor angle deviation (a) and speed deviation (b) simulation results in case 3.

Performance index can be calculated or measured and it can be used to evaluate system performance. Performance index is integral of absolute error. This index is useful especially for simulation studies (Dorf and Bishop, 1995).

$$J = \int_0^{20} |\Delta\delta(t)|.dt \qquad (1)$$

$$J = \int_0^{20} |\Delta w(t)|.dt \qquad (2)$$

Evaluated performances of controllers as visual by all simulation results are evaluated as numerical according to performance indexes which are given by (1) and (2). In order to express performances of controllers under different operating conditions as numerical. Performance indexes of four controllers are given at Table 5. So it is shown that FPID PSS is superior to CPSS, PID PSS and FPSS as numerical.

Table 5 - Performance indexes

	Rotor Angle Deviation			Speed Deviation		
	Case1	Case2	Case3	Case1	Case2	Case3
CPSS	118,0338	209,1853	99,558	1,3529	2,3858	1,2221
PID PSS	70,4689	115,9383	66,2815	0,9278	1,475	0,9231
FPSS	62,4201	95,5168	56,4739	0,6541	1,058	0,6283
FPID PSS	42,7147	64,9002	39,7199	0,5286	0,8109	0,5191

5. CONCLUSIONS

In this study a FPID PSS is designed for SMIB power system. It is performance is compared with CPSS, PID PSS and FPSS. It has shown that FPID PSS is superior to CPSS, PID PSS and FPSS on damping oscillation of power system after a disturbance. It is also shown that determination of PID parameters through fuzzy controllers is easy and reliable. Also PID PSS can be adjusted adaptively with fuzzy according to power system loading conditions.

REFERENCES

1. Abdelazim, T. & Malik, O.P. (2003) An Adaptive Power System Stabilizer Using On-line Self-Learning Fuzzy Systems. Proceedings of IEEE Power Engineering Society General Meeting, Toronto, pp.1715-1720.

2. Birdwell, J.D. & Wang, Y. (1994) Lyapunov Stability Analysis of Systems Using the Fuzzy-PID Controller. Proceedings of the American Control Conference , Baltimore, pp. 966-970.

3. Chung, H., Lee, J., Joe, S., Chung, D., Kim, S. & Chung, M. (1999) Application of Fuzzy PID Controller for Stabilization of Power System. Fuzzy Systems Conference Proceedings, Seoul, pp.1729-1733.

4. Deckmann, S.M. & da Costa, V.F. (1994) A Power Sensitivity Model for Electromechanical Oscillation Studies. IEEE Transactions on Power Systems, 9(4), 965-971.

5. Doraraju, P., & Nondy, R.K. (2000) An Adaptive Controller for Improving Dynamic Stability of Synchronous Power System. Electric Power Components and Systems, 28(1), 1-11.

6. Dorf, R.C., & Bishop, R.H. (1995) Modern Control Systems. America: Addison-Wesley Publishing Company.

7. El-Metwally, K.A. & Malik, O.P. (1995) Fuzzy Logic Power System Stabiliser. IEE Proceedings on Generation, Transmission and Distribution, 142(6), 277-281.

8. Fadlalmoula, Z., Robertson, S.S., O'reilly, J. & Leithead, W. (1998) Individual Channel Analysis of the Turbogenerator with a Power System Stabilizer. International Journal of Control, 69(2), 175-202.

9. Ferreira, A.M.D., Barreiros, J.A.L. & Brito-de-Souza, J.R. (1998) Fuzzy Power System Stabilizer Including a Fuzzy PI Controller. UKACC International Conference on Control Proceedings, United Kingdom, (pp.865-870).

10. Godhwani, A. & Basler, M.J. (1996) A Digital Excitation Control System for Use on Brushless Excited Synchronous Generators. IEEE Transactions on Energy Conversion, 11(3), 616-620.

11. Hasan, A.R., Martis, T.S. & Ula, A.H.M.S. (1994) Design and Implementation of a Fuzzy Controller Based Automatic Voltage Regulator for a Synchronous Generator. IEEE Transactions on Energy Conversion, 9(3), 550-557.

12. Hiyama, T. (1994) Real Time Control of Micro-Machine System Using Micro-Computer Based Fuzzy Logic Power System Stabilizer. IEEE Transactions on Energy Conversion, 9(4), 724-731.

13. Hiyama, T. (1994) Robustness of Fuzzy Logic Power System Stabilizers Applied to Multimachine Power System. IEEE Transactions on Energy Conversion, 9(3), 451-459.

14. Hosseinzadeh, N. & Kalam, A. (1997) A Direct Adaptive Power System Stabilizer. Proceedings of Fourth International Conference on Advances in Power System Control, Operation and Management, Hong Kong, pp.377-382.

15. Hsu, Y.Y. & Cheng, C.H. (1993) A Fuzzy Controller for Generator Excitation Control. IEEE Transactions on Systems, Man and Cybernetics, 23(6), 532-539.

16. Juang, Y.T., Chang, Y.T., & Huang, C.P. (2007) Design of Fuzzy PID controllers using modified triangular membership functions. Information Sciences, 178(5), 1325-1333.

17. Kashki, M., Gharaveisi, A., & Kharaman, F. (2006) Application of CDCARLA Technique in Designing Takagi-Sugeno Fuzzy Logis Power System Stabilizer. First International Power and Energy Conference, Putrajaya, pp.280-285.

18. Larsen, E.V. & Swann, D.A. (1981) Applying Power System Stabilizers Part I: General Concepts. IEEE Transactions on Power Apparatus and Systems, pas-100(6), 3017-3024.

19. Lo, K.L. & Sadegh, M.O. (2002) Systematic Method for the Design of a Full-scale Fuzzy PID Controller for SVC to Control Power System Stability. IEE Proceedings on Generation, Transmission, Distribution, 150(3), 297-304.

20. Mukherjee, V. & Ghoshal, S.P. (2007) Comparison of Intelligent Fuzzy Based AGC Coordinated PID Controlled and PSS Controlled AVR System. International Journal of Electrical Power & Energy Systems, 29(9), 679-689.

21. Radman, G. & Smaili, Y. (1988) Performance Evaluation of PID Power System Stabilizer for Synchronous Generator. IEEE Southeastcon Conference Proceedings, Tennessee, pp.597-601.

22. Reza, M.A. & Choudhry, M.A. (1990) Design of a Robust Power System Stabilizer Over a Wide Range of Load Characteristics. 23rd Annual North American Power Symposium, North America, pp.8-13.

23. Shi, J., Herron, L.H. & Kalam, A. (1992) Comparsion of Fuzzy Logic Based and Rule Based Power System Stabilizer. First IEEE Conference on Control Applications, Dayton, pp.692-697.

24. Tang, K.S., Man, K.F., Chen, G. & Kwong, S. (2001) An Optimal Fuzzy PID Controller. IEEE Transactions on Industrial Electronics, 48(4), 757-765.

25. Wang, N. (2002) A Fuzzy PID Controller for Multi-model Plants. Proceedings of the First International Conference on Machine Learning and Cybernetics, Beijing, pp.1401-1404.